FRAME SCAFFOLD
TECHNICAL MANUAL

www.csiscaffold.com

TABLE OF CONTENTS

INTRODUCTION

The purpose of this manual is to implement standard erection guidelines and inform the users of scaffold the potential dangers that are associated with erecting, dismantling and using a scaffold system. In this manual you will find Commercial Scaffolding Companies, Inc.'s (CSI) erection guidelines, user procedures, and any pertinent information that relates to the technical specifications of CSI's scaffold systems.

CSI has developed a frame scaffold to meet the various conditions and needs of today's modern work environment. CSI leads the industry with innovative solutions to many recurring problems within the construction world. Safety is of paramount concern to CSI, and it takes the cooperation of all involved with scaffold construction and use to remain compliant with not only CSI's company safety rules, safe work practices, and policies but also all applicable local, state, and federal codes and regulations.

CSI's safety policies and procedures are not to be used in lieu of or as a substitute for, but rather as a supplement to, any federal, state or local regulations that may pertain to scaffold construction, dismantling or use on commercial, industrial, and residential worksites. It shall be the responsibility of all erectors and users to read and comply with the following common sense guidelines that are designed to promote safety for all involved with the erection, dismantling, and use of CSI scaffold. Every effort has been made to make this manual as comprehensive as possible; however, these guidelines do not purport to be all-inclusive. Furthermore, the guidelines contained in this manual are not designed to supplant or replace other additional safety and precautionary measures. If CSI policies and procedures contained in these documents conflict in any way with any state, local, federal, government code or regulation, said code or regulation shall supersede these policies and procedures and it shall be the responsibility of each individual to comply therewith.

PERSONNEL RESPONSIBILITIES

Ultimately it is the responsibility of every individual to correct and/or provide notification of any foreseeable hazard in the work place whether that hazard is to themselves or to those persons around them. Accidents can be drastically minimized if every person involved with scaffolding takes personal responsibility for putting safety as a number one priority.

The responsibilities contained herein are intended for purposes of scaffold erection, dismantling, modification, and repair. Additional responsibilities for fall arrest systems and other company policies may not be included. Please refer to CSI's Injury Illness Protection Program for further guidance pertaining to CSI employees.

General Manager

The General Manager shall be responsible for allocating appropriate funds for purchasing the appropriate scaffold material and safety equipment needed for work that is being conducted. General Managers will identify employees who are affected by this company manual, and shall provide insight as to revisions that may be necessary as workplace conditions and technology upgrades become available. The General Manager shall ensure that all employees who are involved with scaffold erection or dismantling have been properly trained and identified by the Foreman / Superintendent.

Safety Manager

It is the Safety Manager's responsibility to provide reasonable, fair and relevant suggestions to all management heads regarding CSI's safety policies and procedures. Safety Managers shall ensure all employees are trained appropriately for the work they are performing and shall audit the current safety policies and procedures as needed to make certain they are current and in compliance with all safety regulations.

Division Manager / Foreman / Superintendents

Division Managers, Foremen, and Superintendents are responsible for ensuring that CSI's safety policies and procedures are followed. Division Managers, Foremen, and Superintendents shall make certain that employees are properly trained for the work they are performing, including Competent Person supervision for all scaffold erection. Division Managers, Foremen, and Superintendents shall ensure employees are using appropriate personal protective equipment for the type of work that is being performed, including the use of fall arrest equipment. Division Managers, Foremen, and Superintendents shall communicate the needs of personnel working in the field to the General Manager.

Qualified Person

The Qualified Person shall have extensive knowledge of the design, use and handling of scaffold material and equipment. They shall be capable of determining loading calculations and design configurations for each scaffold situation encountered. As per Federal OSHA 1926.450, *"'Qualified' means one who, by possession of a recognized degree, certificate, or professional standing, or who by extensive knowledge, training, and experience, has successfully demonstrated his/her ability to solve or resolve problems related to the subject matter, the work, or the project."* The Qualified Person may be the General Manager, Safety Manager, or in some cases Superintendents. This will depend upon experience, formal training, and demonstrated ability to solve or resolve issues relating to scaffold construction.

PERSONNEL RESPONSIBILITIES

Competent Person

The Competent Person shall be responsible for overseeing scaffold erection, proper selection of material and the safety of personnel who are erecting, dismantling, altering, or modifying scaffold systems. Per Federal OSHA 1926.450, *"'Competent Person' means one who is capable of identifying existing and predictable hazards in the surroundings or working conditions which are unsanitary, hazardous, or dangerous to employees, and who has the authorization to take prompt corrective measures to eliminate them."* Competent Persons must be aware of the skill level and knowledge of the personnel working on the scaffold so as to appropriately assign duties during scaffold erection and removal. Competent Persons shall also ensure the scaffold is being assembled according to company policy and current scaffold regulations. The Competent Person may be the Safety Manager, Foreman, or Superintendent.

Apprentices / Laborers

Apprentices and Laborers shall comply with company safety policies and procedures. They shall conduct themselves in accordance with the training they receive. Apprentices and Laborers shall report unsafe conditions and make every effort to expand their knowledge about scaffold setups and situations.

GENERAL INFORMATION

A completed scaffold is a safe and unique structure that provides access to areas of buildings or structures that otherwise would be difficult or impossible to reach. A properly built scaffold system will enable workers to perform their tasks as needed in a safe and efficient manner.

By definition a scaffold is a temporary elevated work platform used for the installation, modification, renovation, access, or repair of buildings, structures or equipment. Since scaffold is temporary, it is imperative that continuing safety inspections of equipment and material take place. Defective material must be repaired or destroyed.

CSI recommends completing an Activity Hazard Analysis (AHA) prior to commencing work on any CSI jobsite. This is necessary to recognize in advance any dangers that may be present on the worksite. CSI believes that accidents and injuries can be avoided. Injuries are completely unnecessary and usually can be prevented through proper training, supervision, communication, and common sense safety practices. The AHA covers hazards that might be encountered on various worksites, such as: untapped earth fills, debris, high voltage lines, unguarded pits, fall exposures, falling objects, uncapped rebar, heavy equipment movement and/or hazardous conditions created by other trades. All unsafe conditions must be corrected **prior** to commencing work. If in doubt about a potentially unsafe condition, report the situation immediately to your supervisor or division Safety Manager.

All CSI's policies must be strictly adhered to when erecting scaffold. No third party scaffolds may be attached to or otherwise become a part of CSI scaffold systems. A CSI Qualified Person will illustrate how the scaffold is to be erected. The Competent Person supervising the erection shall be responsible for complying with the scaffold layout and ultimately confirm that the scaffold is safe for use. If the scaffold exceeds 125 feet in height, the scaffold shall be designed by a registered professional engineer as required by OSHA regulations.

REMEMBER!!!

- Follow all state, local, and federal codes, ordinances, and regulations pertaining to scaffolding.
- Do not construct, modify, alter, or dismantle scaffolding unless you have had proper training.
- Never use scaffold equipment for purposes or in ways for which it was not intended.
- Do not use any equipment that is in a damaged or questionable state.
- Do not work on a scaffold if you feel sick, weak, or are under the influence of drugs or alcohol. CSI drug tests its employees pre-employment, on a random basis, and testing is mandatory after an accident.
- Never take chances; if you are in doubt about the condition of the scaffold or any other unsafe condition on the jobsite, contact your supervisor immediately!

MATERIAL INSPECTION PROCEDURES

Continuing proper inspections of scaffold material is critical in order to maintain the overall integrity of the completed scaffold structure. It is CSI policy to follow the following procedure to discard or repair faulty equipment:

1. Yard crews, prior to loading trucks for scaffold transportation, must determine if there are any defective component parts. Any scaffold material that is found to be defective must be pulled from useable inventory and marked as "in need of repair" or discarded.
2. During the unloading of vehicles and scaffold erection stage, the material shall be inspected for any defects or inadequacies. Any components found to be defective shall be marked as faulty and set aside to be returned to the yard. Any material found substandard shall be repaired or destroyed. All CSI trucks shall contain at least one can of red spray paint in order to mark defective equipment. Defective equipment shall be placed on top of all scaffold material on the truck in order for defective material to easily be seen by yard crews.
3. During dismantling stages, scaffold components will again be inspected and separated from acceptable equipment. Defective equipment shall be marked and placed on top of all other scaffold material on the truck in order for yard crews to easily identify faulty components.
4. During the removal of scaffolding from the trucks, yard crews shall identify any items marked as damaged and will temporarily stockpile items in a designated area in the yard that is clearly separate from functional inventory. All steel components are scrapped to local steel recycling facilities. Usable sections of damaged plank are cut for use as mud sill material. Any remaining items are disposed of.

Scaffold Material Inspection for Defective Components:

CSI inspects all material during the erection process to assure the equipment being used is in safe and good condition. Any substandard scaffolding will be set aside for repair or scrapped. It is critically important to continuously check for unsafe equipment at all times. To aid in determining defective scaffold equipment, a visual inspection of all components must be conducted.

Scaffold Plank Inspection:

Planks must be in good working condition. The proper storage and handling of wood scaffold planks can prevent unnecessary damage (see Plank Storage section, page 11). Any plank that is suspected to be defective must be replaced immediately.

- CSI uses a high quality laminated veneer plank. All CSI employees must follow the care, storage, use, maintenance, and inspection procedures for laminated veneer scaffold planks. Inspect all planking, and if excessive cracking, warping, or splitting is apparent or exceeds manufacturer's recommendations or CSI specifications, the planking must be marked as faulty and removed from service.

- Certain acids, liquids, and other chemicals may decay or delaminate the scaffold plank. Do not allow strong alkalis, or other oxidizing chemicals to come in contact with the scaffold plank. If delaminating is noted on the plank, the plank shall be marked as faulty.

- Planks with noticeable saw kerfs, holes, or notches shall be marked as faulty.

- Planks with large face break gouges, end splits, paint or opaque finishes that obscures the wood grain to a degree where the majority of the plank cannot be seen shall be marked as faulty.

MATERIAL INSPECTION PROCEDURES

- Scaffold planks found to be faulty may be cut into 10″ squares to be used as mud sill material providing the plank is in an adequate state to serve as a mud sill. Mud sills that are split, cracked, or are in a questionable state shall be discarded.

- **End Splits:** End splits are the separation of the wood through the piece to the opposite surface due to a tearing apart of the wood cells. End splits are measured as the penetration of a split from the end of a piece and parallel to the edges of the piece. End splits are normally the result of abuse or repeated wet/dry cycles. An end split does not necessarily weaken a scaffold plank. Before the plank is returned to service, a Qualified or Competent Person shall approve the plank. End splits are normally not a factor with laminated veneer planks.

REPAIRABLE: End splits are deemed repairable, providing the split does not exceed 9″ in length. End splits less than or equal to 9″ long may be repaired with banding to keep the split from growing. Planks with end splits greater than 9″ long should be inspected by a Competent Person to determine if the plank can be cut back so as to eliminate the split, or if the plank must be removed from service.

- **Narrow Faced Splits:** These are open splits on the narrow face of the plank that may have been by abusive handling, forklift damage or overloading. Diagonal splits are likely to be accompanied by face breaks. It may be necessary to use a thin, stiff, probe to distinguish a split from a shallow weathering check. Planks containing open splits on the narrow face should be removed from service.

- **Face Breaks:** A break on the wide face of the plank and is typically characterized by an irregular crack or straight wrinkle across the face. A break on the wide face is usually the result of overloading the plank and results in a dangerous loss of strength. Planks with face breaks must be removed from service.

- **Saw Kerfs:** Saw kerfs are also known as saw cuts, and may be found across the face or through the edge of the plank. A saw kerf across the face effectively reduces the plank thickness, which severely reduces plank strength.

REPAIRABLE: Planks with saw kerfs can only be repaired by sawing off and eliminating the saw kerf portion of the plank, or it must be totally removed from service.

- **Notching and Drilled Holes:** Notches occur when scaffold planks have to be custom fitted to get around unique obstructions such as pipes, etc. Notches, like some saw kerfs and saw cuts, reduce the effective width and therefore a plank's load capacity. Consult the Qualified Person scaffold designer when notches or drilled holes are required in the plank.

REPAIRABLE: Planks with notches or drilled holes can only be repaired by sawing off the notched or drilled portion of the plank, or it must be removed from service.

- **Discoloration, Fungus, Decay or Insect Attack:** LVL scaffold planks are about 95% wood fiber and as such are susceptible to the same kinds of chemical and biological agents as sawn planks. Discoloration is evidence of a chemical contamination, which occurs when the plank is in contact with strong acid or alkaline solutions. Oxidizing acids, such as nitric acid, degrade wood fiber more than non-oxidizing acids. Decay will result when wet plank is stored improperly or with prolonged contact with the ground. Insects, such as termites, can cause major damage to scaffold planks. Any plank displaying unusual coloring, organic growths, soft spots or insects holes must be removed from service.

- **Excessive Twist, Bow, Crook and Cupping:** Any change in straightness or flatness to an LVL scaffold plank is usually the result of irregular moisture content.

REPAIRABLE: When inspecting plank with these problems, the assistance of a Competent or Qualified Person is necessary. Frequently, allowing the plank to dry more thoroughly can help correct these misalignments, especially in the case of a cup. When these conditions exist and it presents a potential tripping hazard, remove the plank from service.

- **Dents, Depression and Gouges:** A heavy object dropped on a plank, or a dropped plank striking an object, can cause surface dents and depressions. Careless forklift operations or chemical exposure may also produce these results.

REPAIRABLE: Upon evaluation by a Competent or Qualified Person, the damaged area within the plank may possibly be cut back to a usable length or otherwise removed from service.

- **Delaminating:** Delaminating is the separation of wood veneers along the glue line. This condition may be caused by improper handling with a fork lift, or possibly by a manufacturing defect due to inadequate glue bond adhesion. DO NOT CUT BACK! Non-repairable! Plank must be removed from service.

Scaffold Frames, Trusses / Putlogs, Tubing, Rails, Outrigger Brackets and Bracing Inspection:

- Welds must be free from cracks and excessive rust.
- Locking devices on rails, goosers, and cross bracing must be in good working order. The rivets that hold the drop down portion of the locking device must be in good working order and not broken.
- All metal components shall be inspected for cracking or other deformities, faulty material shall be marked.
- If excessive rust is apparent on metal components, that component shall be discarded and/or marked as faulty.
- Any material that is bent, dented, kinked or twisted badly out of its original shape shall be marked as faulty.
- Scaffold frames, tubing, and putlogs may be shortened or modified in the field to accommodate the needs of a current setup providing that the cut does not affect the overall performance and strength of the component and a Competent or Qualified Person deems the modification satisfactory.

Clamp Inspection:

- Clamps must be in good original functional order.
- Clamps must be cleaned prior to being installed if there is excessive plaster, monokote, or concrete build up.
- Bolt threads must be clean and allow the nut to turn freely.
- Any cracks, deformities or damaged threads require that the clamp be removed from service.
- Clamp must retain original manufactured shape and alignment.
- Swivel clamp rivets shall be in good condition, have no excessive play and allow the clamps to swivel freely.

PLANK STORAGE REQUIREMENTS

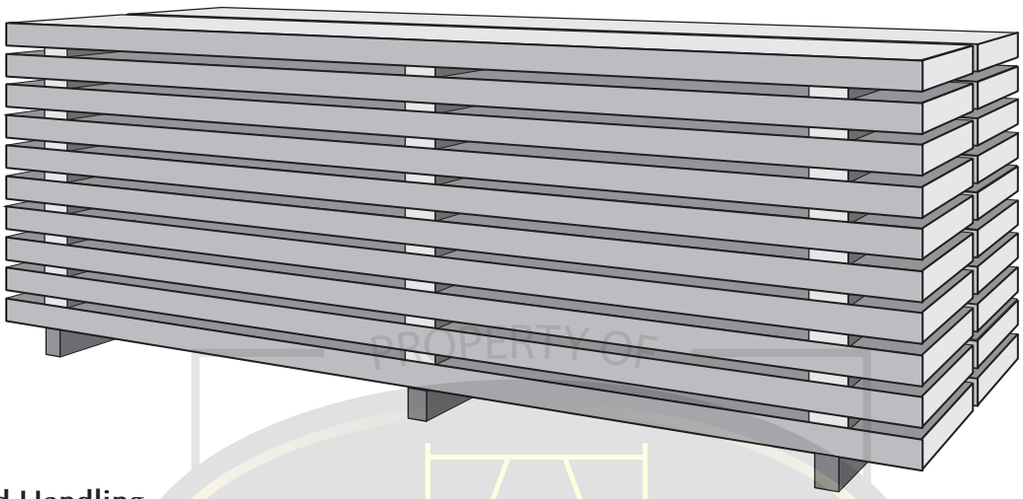

Storage and Handling

The proper storage and handling of wood scaffold planks can prevent unnecessary damage. Plank strength and stiffness properties are affected by moisture content; therefore, it is important to stack scaffold planks off the ground. Bundles of scaffold planks should be supported on stickers spaced no more than 8′ on-center to provide air circulation and easy access for forklifts. Stickers between bundles should line up with the stickers on the ground to prevent bowed or damaged scaffold planks.

To prevent decay, store wet scaffold planks in a manner that allows for proper air circulation. When stacking, improve air circulation within a bundle of wet scaffold planks by separating each layer with stickers. Space the stickers no more than 8′ on-center and line them up vertically. Bands should line up with the stickers to prevent bowed or damaged scaffold planks.

Bundles of Scaffold Planks

Bundles of scaffold planks should be assembled neatly and contain planks of similar lengths. Scaffold planks sticking out from the ends of bundles can be snagged and damaged.

Weather Conditions

Certain geographical areas experience extreme weather conditions. In those areas, decay may be more likely to occur and the following precautions should be followed:

- Store scaffold planks in a level, well-drained location.
- Protect scaffold planks from weather by placing them under a roof or under a material that will shed water but is porous enough to allow moisture to escape.

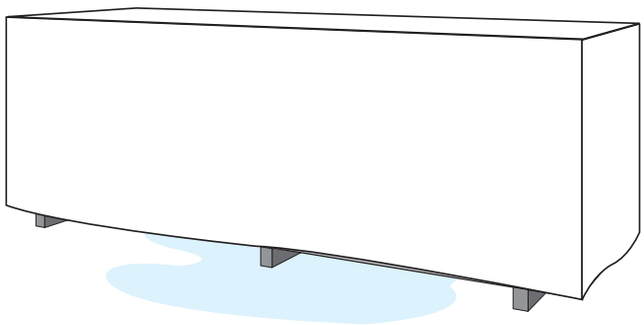

FALL ARREST SYSTEM INFORMATION

Proper care must be taken when attempting to implement a functional fall arrest system. A fall arrest system that has not been designed and implemented properly may cause serious injury or death to the user. CSI employees who intend to use a fall arrest system must attend CSI Fall Arrest System Training. The training has been created in accordance with ANSI Z359.2; refer to "Minimum Requirements for a Managed Fall Protection Plan" for proper guidance.

There is far too much information necessary to attempt to explain in any great detail what is required of a proper fall arrest system in this manual. However, remember a few of these important points when implementing a fall arrest system.

1. Do not attempt to use fall arrest equipment unless you have completed CSI's Fall Arrest System Training or training that is comparable.
2. The fall arrest system must be designed by a Competent or Qualified Person, knowledgeable in the hazards and regulations associated with the use of a fall arrest system. A well thought out system must be set in place or there is no reason for trying to implement its use at all.
3. All fall arrest equipment must be in good working order. Inspect body harnesses and lanyards prior to every use. If there is found to be any fraying, cuts, tears, stains, burns, or severed components of the system, the component must be cut into pieces and scrapped. This is necessary to make certain no person tries to use the system after it has been found to be defective.
4. Free fall distances must be limited to a maximum of 6 feet when using a shock absorbing lanyard. Free fall must be limited to a maximum of 2 feet when using a self retracting lifeline. An appropriate anchor above the employee's head or potential place of fall must be selected.
5. A shock absorbing lanyard is a good way to limit the fall arrest forces on a person's body and components in the system. If a shock absorbing lanyard is preferred, it cannot be used in series with other lanyards or in combination with a retractable lanyard.
6. Fall arrest systems are only as good as their weakest link. Appropriate anchor selection is critical. Anchor attachment points for personal fall arrest systems must be able to withstand, without failure, 5,000 pounds per employee or be designed by a Qualified Person with a safety factor of 2:1.
7. Understand rescue procedures, regulations, and hazards associated with an assisted rescue. Employees cannot be left suspended for any extended period of time as this could be detrimental to employee health and cause serious injury or death.
8. Do not use scaffolding as an anchorage point for fall protection equipment unless written documentation has been obtained from CSI for instructions of attachment.
9. Follow all manufacturer recommendations for the proper use, storage, care and maintenance of fall arrest equipment.

FALL PROTECTION FOR ERECTORS

The Competent Person must determine if a fall arrest device for the erectors / dismantlers will be feasible and not create a greater hazard to the leading edge worker. If the use of a conventional fall arrest system creates a greater hazard to the leading edge worker, the fall protection may be omitted providing a fall protection plan is written and implemented in accordance with Cal-OSHA Article 24, 1671.1 or Federal OSHA 1926.502 (k) "Fall Protection Plan". Per Federal OSHA 1926.451 (g) (2), *"Effective September 2, 1997, the employer shall have a Competent Person determine the feasibility and safety of providing fall protection for employees erecting or dismantling supported scaffolds where the installation and use of such protection is available and does not create a greater hazard."*

To minimize the fall exposure presented to erectors, the erectors shall follow this simple erection procedure. Further details of erection and dismantling processes while incorporating the fall arrest system into scaffold construction are covered in CSI's Fall Arrest System Training course.

1. Frames will be stacked to the upper level from a lower level that is fully planked and guard railed.
2. Full planking must now be installed across the bearers. The result is a fully planked platform on the level above the erector with no guard rails, or cross bracing, only free standing frames and planks are on the level above.
3. The erector must attach to a properly designed fall arrest device. He may now access the above level. He is currently exposed to a direct fall from the platform but shall be protected by the personal fall arrest system.
4. The erector will now install guard rails in the bay he is currently standing in.
5. Once guard rails are installed in the first bay, the erector may now detach from the fall arrest device. The fall exposure at this point is drastically minimized.
6. Guard rails in subsequent bays shall be installed with the leading edge worker standing behind the fully guard railed bay.
7. Cross bracing may now be attached and the erector may continue with erection by stacking frames to the level above.

By following this procedure, the fall exposure to the leading edge worker has been minimized while at the same time eliminating the entanglement hazard presented to the leading edge worker. Not all scaffold situations will allow this sort of erection procedure. Some scaffold situations allow for a 100 percent tie off without creating the entanglement or swing fall hazard to the leading edge worker. The determination of when to tie off to a fall arrest system must be made on a site by site basis and upon the determination of a Competent Person.

ERECTION GUIDELINES

Scaffolding is inherently dangerous. In order to minimize accidents during scaffold erection, follow these simple guidelines. The CSI Competent Person must be knowledgeable in the applicable regulations, company policies and standard industry practices. Every jobsite is different and rarely scaffold setups are exactly alike from job to job. It would be impossible to detail *exactly* how every scaffold shall be constructed. However, with proper training, experience, and knowledge of the regulations and standard industry practices, the scaffold that is completed will be a strong, safe and unique structure.

- Follow CSI's procedure for inspection of frames, tubes, clamps, putlogs, rails, and bracing. Refer to manufacturer recommendations for inspection procedure of laminated veneer manufactured planking components. Follow CSI's guidelines for inspection of plank on pages 8–10.
- Planks to be free from excess cracking, dry-rot, oil, or heavy paint material. Any plank that is not in good condition must be immediately replaced.
- Only scaffold grade wood planking, or fabricated planking and decking meeting the strength and deflection requirements of OSHA and ANSI shall be used.
- All braced connections must be made secure prior to proceeding further with erection.

A firm solid base capable of supporting intended leg loads must be selected for the scaffold structure. A minimum 10″ x 10″ x 2″ (nominal dimensions) mud sill must be used underneath the base plate. Or 10″ x 10″ x 1 1/8″ thick exterior grade plywood may be used in lieu of the block. Stacking block is acceptable providing it will not create an unstable situation for the base plate to sit on. Erectors must use common sense and use good engineering practices that will not compromise the integrity or strength of the scaffold system when determining base layout. If placing scaffold on a roof, consult with the engineer or builder to determine if the roof will support the intended scaffold leg loads. Mud sills may not be required on some concrete surfaces, the determination must be made by the Qualified Person and dependent upon the thickness of the concrete slab.

- The use of screw jacks, extension legs, and base plates must be implemented on all scaffolds, the base plates must be centered and nailed to the mud sill using a minimum two #8 penny nails where mud sills are used.
- All frames and legs must be made level prior to continuing the erection process. The scaffold must be made plumb and square along all axes. The foundation for a sturdy scaffold lies in the base integrity and plumbness of the system.
- The scaffold must be tied to the supporting structure at a minimum to the intervals specified by CSI, OSHA, and/or engineering. Refer to the Standard Scaffold Layout section (beginning on page 43) for information regarding tie spacing, bracing patterns useable levels, and working load capacity.

Any part of a structure supporting the scaffold shall be capable of supporting the maximum intended loads to be applied. The scaffold may be secured to wood studs, metal studs, concrete floor slabs / columns, bent plate on the floor levels, through windows or through the use of parapet clamps. Anchor selection is very important, and may include, but not limited to, the use of drop in anchors, powder actuated tools that use concrete fasteners, nails (no smaller than 8 penny), and butterfly bolts. Proper fastener selection is critical to the scaffold integrity, and provisions for their use may be necessary if the condition warrants, such as in the use in scaffold containment, e.g. tarps or shrink wrap. The determination must be made per jobsite by the Competent Person.

- Scaffolds where shrink wrap or tarps are to be installed shall have all frames pinned and/or bolted together. A mixture of positive / negative ties must be increased by a minimum of 20 percent above minimum OSHA requirements as a standard precaution when implementing tarps on scaffolds. Care should be taken to maintain the correct clearance between the structure and the scaffold system.

- As a minimum standard, the location of ties to the structure shall not exceed 30 feet horizontally and 20 feet vertically if the scaffold is 3 feet wide or less. If the scaffold is more than 3 feet wide, tie spacing may be increased to 26 feet vertically. Once again, this is a minimum standard as prescribed by OSHA. CSI recommends the engineering data starting on page 43 for reference to tie spacing.
- When the scaffold height exceeds 3 times its minimum base ratio (Cal-OSHA 3:1), the scaffold shall be tied back to the structure to prevent tipping. Federal OSHA allows a 4:1 height to base ratio. Tie continuous scaffold to the structure at each end. Stabilize circular or irregular scaffolds in such a manner that the completed scaffold is secure and restrained from tipping. See Stability Precautions section (page 25) for attachment intervals and additional tie-in information.
- Maintain appropriate clearances from high voltage lines as outlined by OSHA. Insulated lines containing less than 300 volts may be within 3 feet of the scaffold. If a line containing more than 300 volts is near, the scaffold system is not permitted to be within 10 feet of the line. However, special attention must be given if the material that is being handled is conductive. Use common sense to maintain adequate clearance between high voltage lines and any conductive material that is being handled. Protection over the line will be necessary if the line cannot be relocated or shut off.
- A safe means of access shall be provided to all working levels. Use CSI attachable ladders, or ladder frames while erecting / dismantling the scaffold. Do not climb on bracing or rails to access levels.
- Ladder must extend at least 3' above platform landing in which they serve.
- Planking must overlap the bearer of supports by no less than 6 inches, otherwise cleating or some other method to prevent the plank from sliding off of the support must be used. Planking must not extend further than 12" beyond the support unless the opposite end of the plank is secured to prevent movement. If planking does extend further than 18" past the centerline of the header, guard rails may be installed to prevent employees from accessing the extended end of the plank. Per OSHA 1926.451 (b) (5) (i), "Each end of a platform 10 feet or less in length shall not extend over its support more than 12 inches (30 cm) unless the platform is designed and installed so that the cantilevered portion of the platform is able to support employees and/or materials without tipping, or has guard rails which block employees' access to the cantilevered end."
- Provide top rails and mid rails on all open sides and at each working level where there is an opening larger than 14" from the work surface. During plaster operations, the scaffold is permitted to be 16" from the work surface while omitting inside guard rails.
- Do not ride rolling scaffolds. Maintain the mandated height to base ratio of 3:1 per California OSHA (Federal OSHA allows a 4:1 base ratio). Keep casters locked when accessing and using rolling scaffolds.
- When using screw jacks on rolling tower scaffolds, the exposed threads of the screw jack cannot exceed 12 inches.
- Screw jacks on stationary scaffolds may be raised to a height of 18 inches provided at least 6 inches remains inserted in the frame leg and the base frames are properly braced.
- Extension legs may only be used to support 4 levels of scaffold. Scaffold of a greater height must be supported by screw jacks.
- A barricade zone must be created and monitored by the erection / dismantling crew in order to protect other workers from falling objects. The zone must be setup with caution or danger tape and a designated crew member must be near the barricade area to monitor and prevent other workers from entering the danger zone.

LOAD CAPACITY

Scaffolds, when erected properly, will carry the weight of any tools, material, debris and personnel as well as its own weight. Consideration must be taken when designing a scaffold system. These include, but are not limited to, the needs of the user, components that comprise the scaffold, height of the system, total number of planked levels, and allowed useable levels.

The maximum load capacity is determined by computing the dead load of the scaffold (the weight of all components that make the scaffold system) and factoring the necessary live loading to be anticipated. A safety factor of four to one must be calculated into the final loading.

OSHA recognizes three live loading capacity figures; most scaffolds will fall under one of the duty ratings as follows:

1. **Light duty: 25 pounds per square foot**
   Most trades will only require a live loading of this capacity. This typically includes new construction for painting, window cleaning, plastering, metal stud installation, drywall, etc.
2. **Medium duty: 50 pounds per square foot**
   Brick masons, false work, etc.
3. **Heavy duty: 75 pounds per square foot**
   Brick masons, stone setters, etc., where heavy loads will be put on the system.

NOTE: Users may or may not be permitted to use all levels of the scaffold system. This will be dependent on the height of the system, configuration of the scaffold as well as the intended uniform loading. A CSI Qualified Person shall note the weight rating of the scaffold system in the design criteria. Users must consult with CSI to determine maximum allowable loading and useable work platforms.

Material loads must be evenly distributed throughout the scaffold platform. Extreme care must be taken to avoid point loading the scaffold. It is very important to note that the load capacity of a scaffold system varies with its design and application. All load ratings provided by CSI must be strictly applied and adhered to in all circumstances.

Plank Loading Considerations

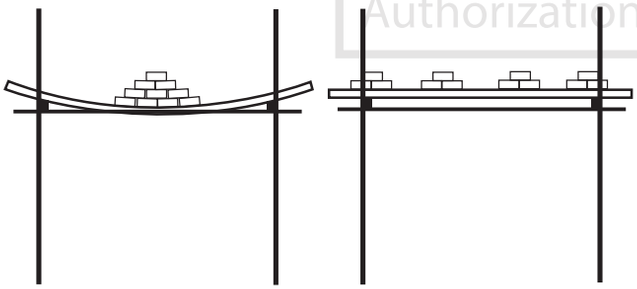

Unsafe Practice
(point load)

Good Practice
(evenly distributed)

Concentrated Tube Loading

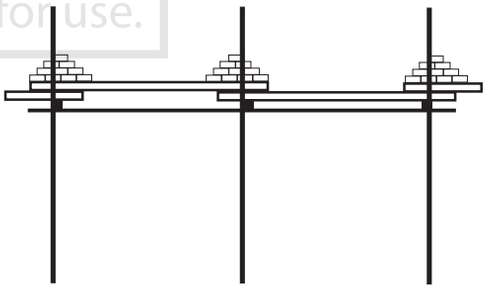

Point Loading
Where point loading is necessary, it should be directed over verticals or frames.

Users shall always take care not to over load scaffold assemblies. A properly loaded scaffold platform will be spread out over a large surface of the scaffold and multiple scaffold legs. In no cases shall the load capacity exceed that which is given for a particular design. One often misunderstood scaffold rating is the number of useable levels. It is critical for users to understand that even though a given scaffold may be rated for 25 psf, 50 psf, or 75 psf, the overall load or weight carrying capacity will be limited to the number of useable levels as permitted in that design. In other words, most scaffold systems cannot carry a full design load for all planked scaffold levels. Due to the nature of scaffold limitations, in general, as the scaffold height increases, the number of levels permitted to load to capacity will have to decrease.

FOUNDATION / MUD SILLS

The strength and stability of a safe scaffold depends upon its foundation. Scaffold collapse is possible if an appropriate foundation is not selected. A good safe base will distribute the load over a suitable ground area. The load of the scaffold and condition of the soil will determine the size of the foundation / sill. The Competent Person must verify that the existing foundation will safely carry the imposed load. Base plates must be placed under all legs. The size of the footing or sill is determined by the total load carried over a particular ground area and by the nature of the soil supporting these sills. It may be necessary to consult with the Engineer of Record to make certain the scaffold load will not exceed the design load of the structure for which the scaffold is placed.

A common problem at many jobsites is undermining of scaffold legs, compromising the structural integrity of the system. As a general rule of thumb, scaffold erectors shall erect the base legs no closer than a 1 1/2 to 1 ratio from an excavation to the leg – meaning, if the trench or hole is 2 feet deep, then the base leg shall be no closer than 3 feet away from the edge of the hole or trench. If this rule cannot be followed, contact the Qualified Person scaffold designer for special considerations and alternative supporting methods.

In some cases it may be necessary to excavate poor soil and replace it with good compacted material. If this is not practical, then the leg load must be distributed by means of a larger sill area to carry the anticipated load. Bricks, concrete blocks, or loose fill is not adequate as a suitable scaffold base or used to support or level scaffold legs.

Foundation / Sill Diagram:

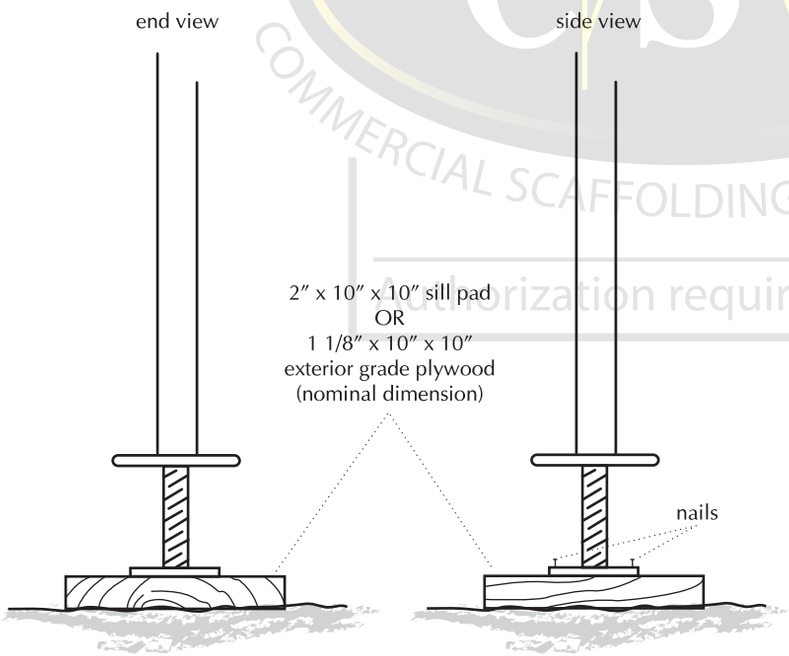

Compacted Ground
(or similar soil conditions)
Leg located central of mud sill

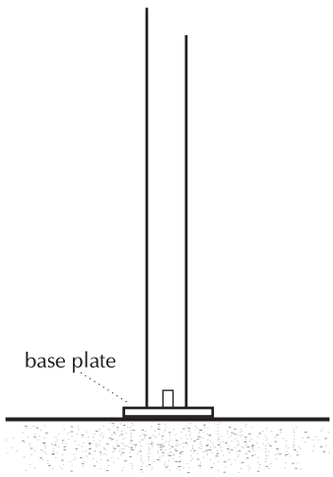

Concrete Base
On croncrete, a base plate is necessary but the mud sill may be omitted.

Scaffold Level Precautions:

After proper foundation is selected and prior to commencing erecting the scaffold to higher levels, the scaffold must be placed in a plumb, square and level attitude. All base frames must be set to level across the lateral and longitudinal axis of the system. Furthermore, all frames must be set so as to not create a "racking" condition. This may be checked by measuring the distance across the scaffold bay from inside leg to outside leg across the bay. Two measurements must be made to make certain the bay is not racked. Both measurements across the legs shall be equal otherwise the scaffold bay is not square.

Screw Jacks:

Screws jacks are to be used to level scaffold that exceeds 4 frames in height. Screw jacks are the devices which will allow the scaffold to be properly trimmed for proper level. Screws jacks must be placed on mud sills per the minimum size as specified on the previous page. Only under the direction of the Qualified Person may screws jacks be placed directly on a surface without the use of mud sills; these areas may include a concrete pad of sufficient thickness to sustain the load imposed by the scaffold or a **thick** steel surface (not robinson / corrugated decking).

CSI manufactured screw jacks contain a notch in the threads which will not allow installers to over extend the jack. This will allow the screw jack to be extended to a maximum height of 16". Part of the prework checks conducted by the Competent Person shall include noting the condition of the screw jack, including the notch. The 16" allowance only applies to supported, stationary scaffolds. If socket style screw jacks are used on mobile scaffolds, the screw jack may only be extended to a height of 12".

Extension Legs:

Extension legs, like screw jacks are used to support and level scaffold frames. All similar precautions and requirements for proper foundation apply to extension legs, including the placement and support of mud sills where required.

Extension legs use gravity pins to support and level frames, unlike screw jacks which use a screw like device to level the scaffold. All holes on the extension leg are placed 2" apart. This will allow for a 2" adjustment range when inserting the gravity pin through the scaffold frame. For additional adjustment, the scaffold frame may be placed directly on top of the gravity pin without using the hole in the scaffold frame. This practice will allow for a 1" adjustment increment, which may be necessary in many scaffold setups when implementing the use of extension legs for proper leveling of the scaffold. No additional hole may be drilled into the extension leg for more adjustment. If the scaffold cannot be properly leveled by the combined use of extension legs, mud sills and properly compacted earth, then the Competent Person shall utilize screw jacks which offer additional adjustment ranges over extension legs.

Extension legs may only be used on scaffold that do not exceed 4 frames in height at 25 psf. The Qualified Person may determine an increased load rating providing the scaffold is at lower heights or at shorter bays with more legs terminating to ground. This determination must be made based on destructive testing data for extension legs with a thorough calculation of allowable leg loading in the configuration intended.

BRACING

The position and number of vertical legs, horizontal rails and cross brace members will determine the ultimate load rating of the scaffold system. Scaffold constructed less than 125 feet in height must be designed by a Qualified Person of CSI. Per OSHA regulations, all scaffolds must be constructed with a safety factor of at least 4:1. If the scaffold exceeds 125 feet in height, an appropriate Registered Engineer must design the scaffold system as required by OSHA.

As required by minimum OSHA standards, scaffolds erected will be set in the following sequence, starting and ending with an X-brace bay. Subsequent bays will follow a pattern of rail bays not to exceed 30 lineal feet until the next X-bay. All bays will have guard rails on either side of the bay as required by OSHA for fall protection. Jobsite conditions permitting, guard rails on the inside of the scaffold, near the work surface, may not be required. In these circumstances, at least one rail per bay, per level is required for additional inside leg scaffold bracing. There are multiple attachment points on the scaffold frame that allow the scaffold erector choices when erecting the scaffold. All of the 0.472″ rod that extends to the webbing of the frame and the lugs that protrude off the legs are all acceptable attachment points for guard rail or bracing attachment. Where the use of inside guard rails are not required, dependent upon OSHA regulations, inside straight rails may be required for additional structural scaffold bracing. Please refer to the Standard Scaffold Layout section (pages 43–47) for proper cross brace, rail, and tie placement.

X-BRACE SIZE REQUIREMENT PER FRAME SIZE	
Frame Size	**X-Brace Size**
40″	32″
5′	48″ or 32″
6′8″	48″ or 32″
8′8″	48″
10′8″	(1) 32″ and (1) 48″

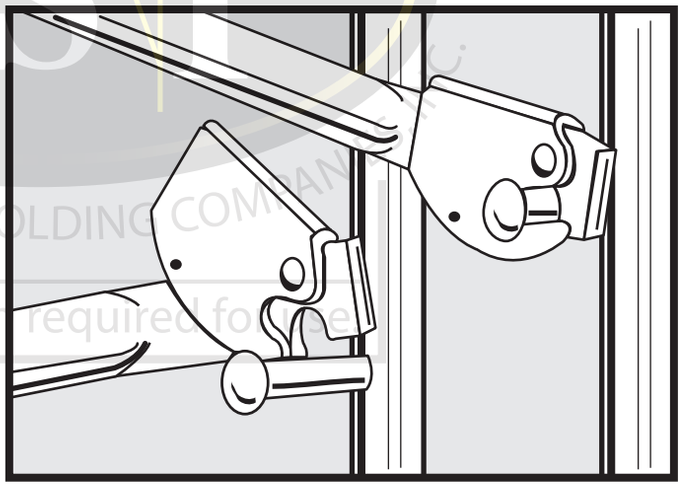

Snap-On Lock

The Snap-On lock system uses a stud attached to the frame where the locking device and release mechanism is attached to the brace. The brace is set on the rod or lug and the gravity actuated flag locks in place. This is a nice feature of CSI bracing as it allows the brace to be set in place from a single location.

BRACING

CREATING NON-STANDARD BAY SIZES

The installer may create non-standard bay sizes by changing the distance between the open ends of the cross bracing. This will allow the installer flexibility in the scaffold system in order to accommodate structures that do not otherwise permit a standard bay size. When installing the scaffold in this manner, it is important to note that if planking is to exceed a 10′ bay length, the installer shall make other provisions in order to provide additional strength to the plank. This may require the installer double plank the bay, or install plywood on top of the planks to provide additional support to the platform surfaces.

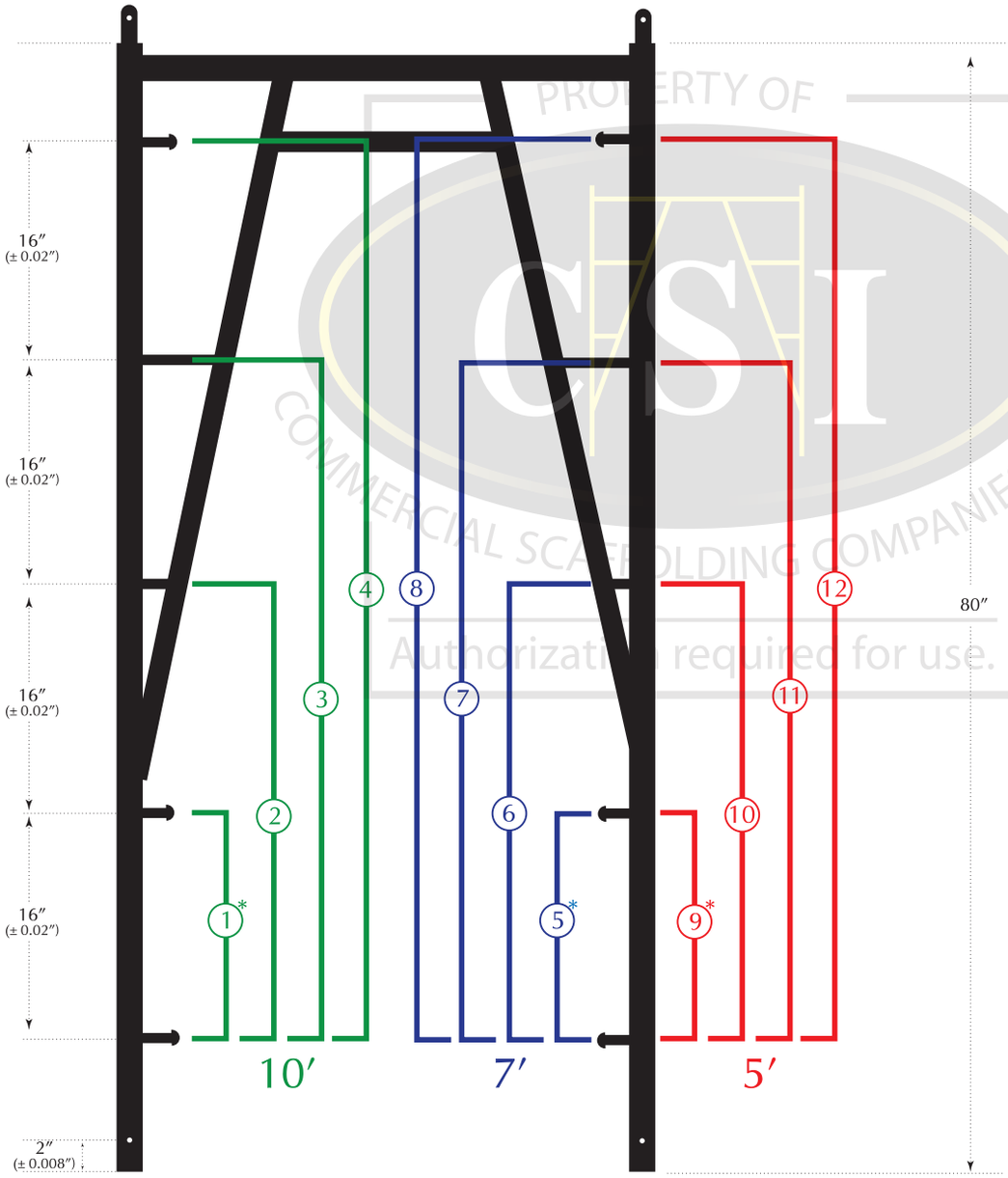

10′ CROSS BRACES		
#	Cross Brace Size	Scaffold Bay Length
1	10′ x 32″ *	10′3″
	10′ x 48″ *	10′8″
2	10′ x 32″	10′
	10′ x 48″	10′5″
3	10′ x 32″	9′6″
	10′ x 48″	10′
4	10′ x 32″	8′10″
	10′ x 48″	9′4″

7′ CROSS BRACES		
#	Cross Brace Size	Scaffold Bay Length
5	7′ x 32″ *	7′4″
	7′ x 48″ *	7′11″
6	7′ x 32″	7′
	7′ x 48″	7′7″
7	7′ x 32″	6′4″
	7′ x 48″	7′
8	7′ x 32″	5′3″
	7′ x 48″	6′

5′ CROSS BRACES		
#	Cross Brace Size	Scaffold Bay Length
9	5′ x 32″ *	5′6″
	5′ x 48″ *	6′3″
10	5′ x 32″	5′
	5′ x 48″	5′10″
11	5′ x 32″	4′
	5′ x 48″	5′
12	5′ x 32″	1′11″
	5′ x 48″	3′6″

* Indicates at least two cross braces shall be used per frame. A maximum of 48″ of unbraced leg is permitted. In most situations, bracing need only occur on one side of the frame.

CREATING VARIOUS BAY SIZES

USING 10′ x 32″ CROSS BRACE

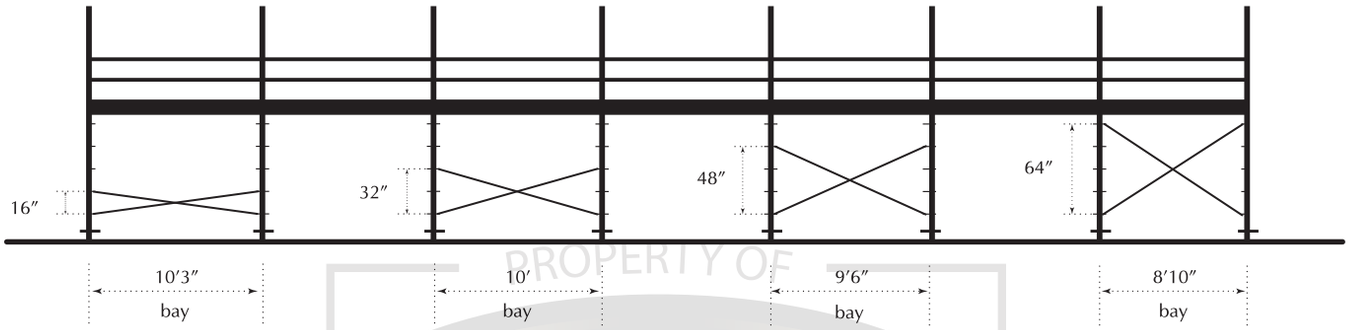

USING 7′ x 32″ CROSS BRACE

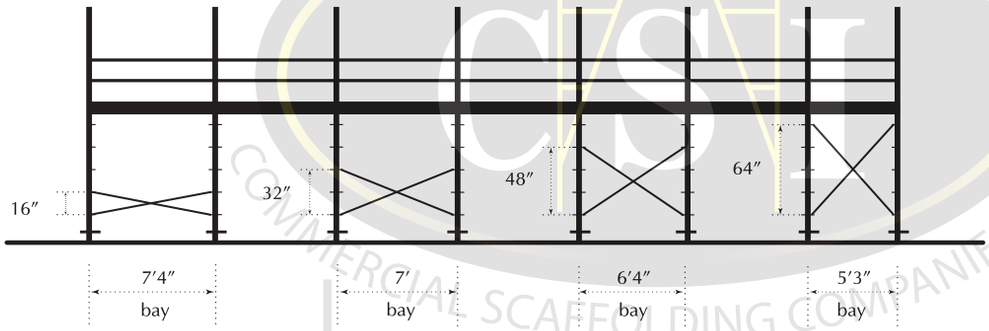

USING 5′ x 32″ CROSS BRACE

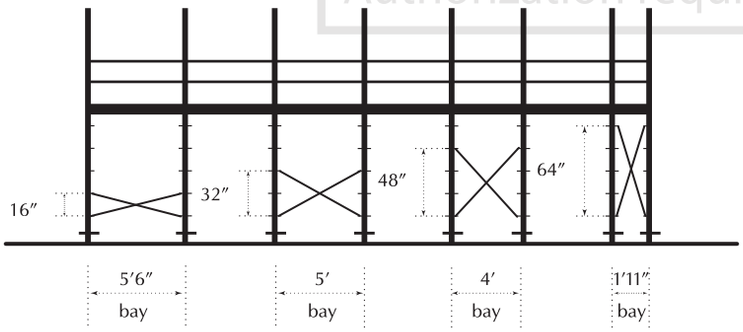

NOTES:
Using 10′ x 48″, 7′ x 48″, or 5′ x 48″ cross braces would produce similar results except bay sizes would be the lengths indicated in the table on the previous page.

GUARD RAILS

Guard rails, consisting of a top rail and mid rail, are required where the platform height exceeds 7′6″. End rails must be installed on end frames to create a fully enclosed platform. The top edge of a top rail must have a height of 38″–45″ above platform surface (or 42″–45″ per Cal-OSHA requirements). When properly installed, the top rail will connect to the lowest lug in the webbing of a typical 6′8″ frame (third lug from the bottom). Mid rails must be installed approximately half the distance between the top rail and platform. The mid rail will occur at a distance of approximately 26″ or the second lug from the bottom of 6′8″ frame. If the platform is within 14″ of a solid faced work surface, guard rails are not required, (or 16″ in plastering operations). Cross bracing may also be used as a part of a guard rail system providing it meets the current federal and California OSHA standard. However, CSI encourages the practice of providing a double guard rail on all platforms. Although not required, it is recommended not to use cross bracing as either a top or a mid rail. Occasionally, guard rails must be installed where a standard size railing is not available to fit in place between uprights. In this situation it is appropriate for the erector to attach guard rails via a double wrap of No.12 gauge wire. However, it is imperative that wire bays are not part of the structural strength of the legs. The practice of wiring on rails is only acceptable for purposes of fall protection.

Guard rails themselves have load limitations as well. The top rail must be able to support without failure a downward or outward force of 200 pounds. Mid rails must be able to withstand 150 pounds of a downward or outward force. These are OSHA standards that are set in place to provide manufacturers and end users a guide in which to base minimum strength requirements.

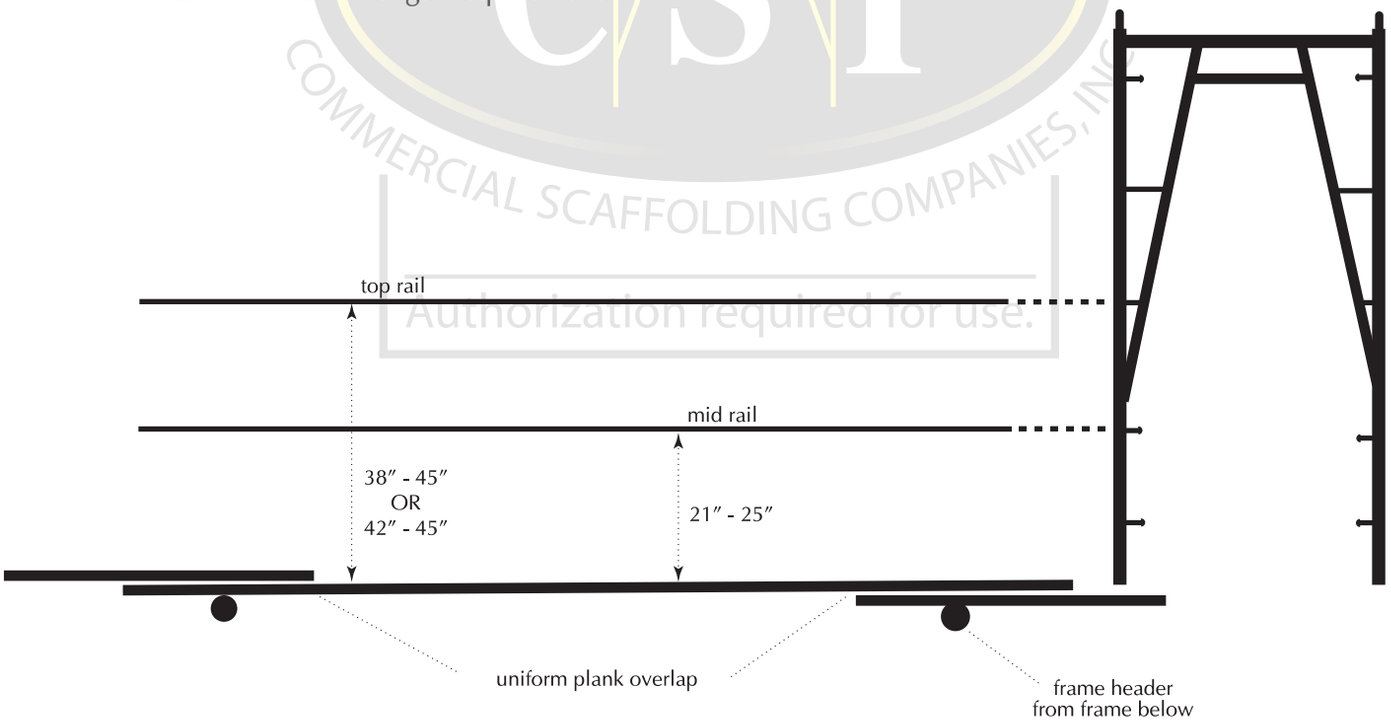

SIDE BRACKETS / OUTRIGGERS

Side brackets are used to extend the effective area of a scaffold to create a wider work platform. CSI uses 4 different sized side brackets that are approved for use on CSI scaffolds. They range in length from 12″–36″. There are special precautions that must be taken when implementing the use of side brackets. In some situations it may be necessary to lock the frames together. This will depend upon jobsite conditions and Qualified Person design. Side brackets create a cantilever effect on the scaffold system and consequently, if a side bracket extends 20 inches or more past the centerline of the scaffold leg, the frames below will need to be locked together to create a secure and rigid system that is not prone to tipping. This is especially important to the leg opposite side to where the side bracket was placed, as these are where the loads are transmitted that creates uplift on the legs. Additionally, the Qualified Person may design a more rigid stand off or bump where outrigger brackets are located, the purpose will be to secure the legs from movement due to cantilever forces.

Side brackets may also be used to step a scaffold frame toward either side of the frame. In many cases where this situation arises, it is almost always necessary to lock all frames together below the area where the side bracket is to be used. If frames are stacked on a 1′ side bracket, the erector may place up to 3 levels on top of the bracket. The erector may place 2 levels on a 2′ side bracket, and 1 level on a 3′ side bracket. If the application requires more frames on the side bracket, knee bracing will be required to alleviate some of the load that the side bracket would normally take. All situations where scaffold will be cantilevered will require Qualified Person design and in some situations a Registered Engineer design.

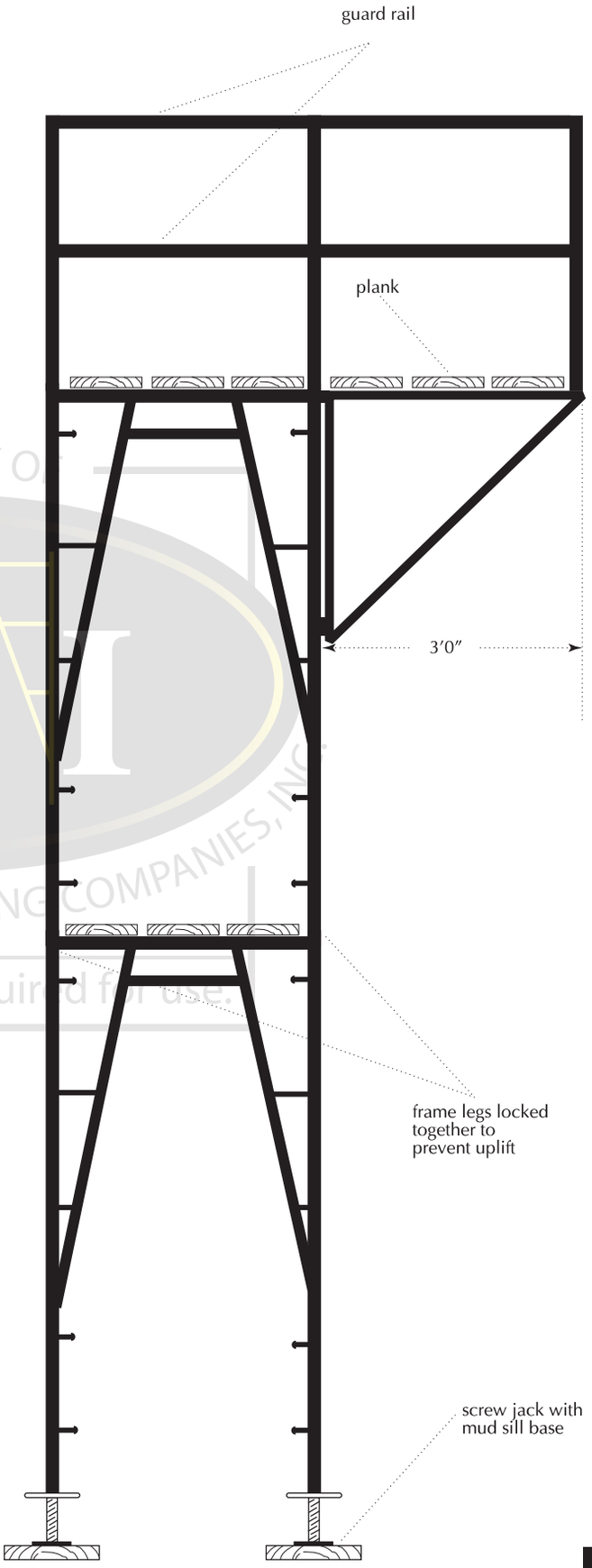

WARNING

Outrigger scaffold platforms are to be rated at 25 psf and are not for storage of material or equipment. Refer to Qualified Person or Engineer for designs that include placing scaffold legs or frames on top of outrigger brackets.

TOE BOARDS

Toe board installation may be necessary to protect workers below from falling objects. Falling objects can include nuts, bolts, rivets, welding rod, hammers, nails, screws, work material, buckets, and/or anything else that is on the scaffold that may present a falling object hazard. Toe board installation is required over all points of designated access and egress, or where employees are required to work or pass underneath the scaffold. A properly controlled barricade zone in lieu of toe boards is permitted, providing the area where falling objects occur is adequately protected. As per the Federal OSHA requirements, all scaffolds that have a platform height that exceeds 10 feet shall contain toe boards to protect workers from falling objects. Toe boards must be at least 3 1/2 inches in height and not allow for more than 1/4″ gap to deck and the side of the toe board.

Toe boards must be able to withstand 50 pounds of a downward or outward force. CSI's toe board bracket provides a secure and rigid means to accept a standard 2″ x 6″ or wood plank for a toe board. The toe board bracket has the added benefit of keeping the planking surfaces together. As required by OSHA, or other special circumstances, toe boards or the use of construction screens / mesh may be necessary in other areas. This will be determined by the Competent Person erecting the scaffold and the special needs of individual jobs.

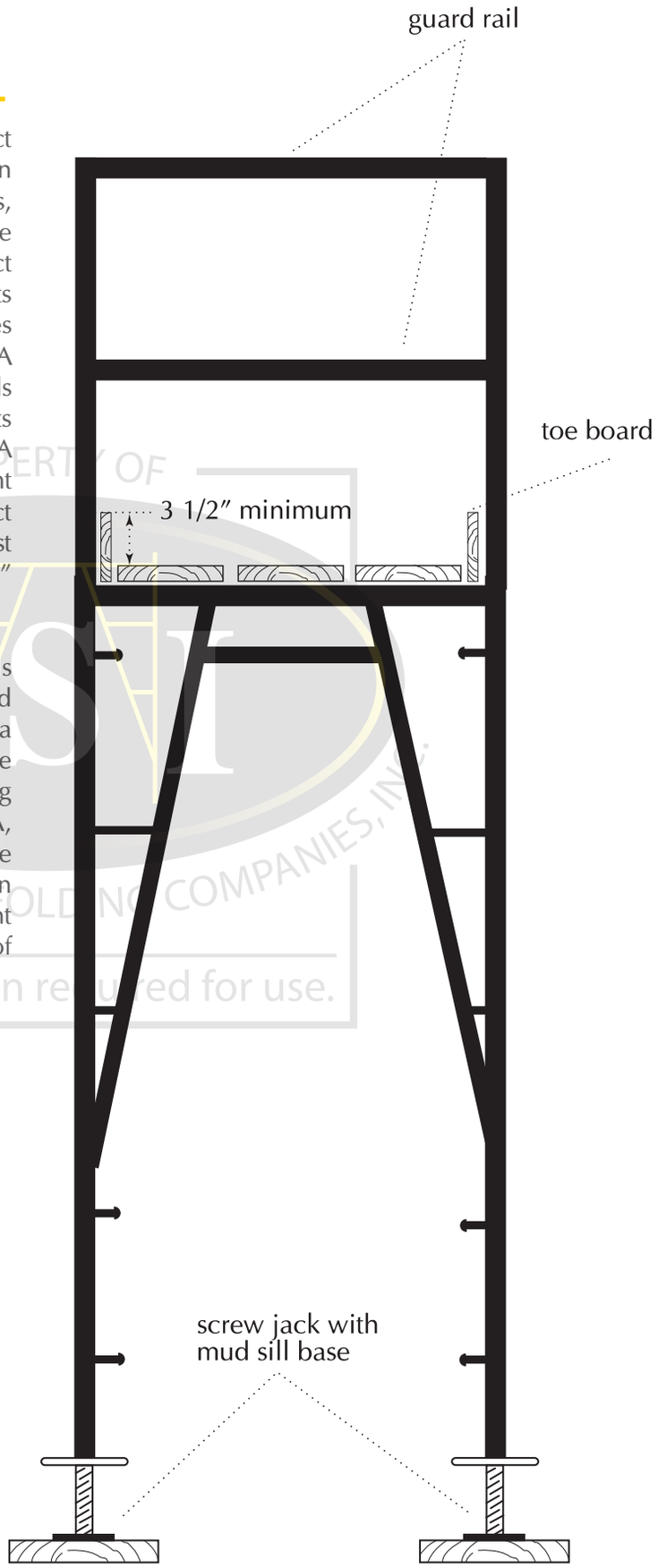

STABILITY PRECAUTIONS

It is essential that the scaffold be adequately tied to the building throughout its entire length and height. A possible collapse may occur if the ties are not sufficient. The purpose of ties are two fold: they control the overall stability of the system from horizontal forces and help to provide additional strength to the legs.

Attachment from the scaffold system to the stabilizing structure(s) must not exceed 20 feet vertically and 30 feet horizontally. The first row of ties are not to exceed 3 times the minimum base ratio of the frame in California, i.e., if the scaffold base is 3 feet wide, the first row (bottom row) of ties shall not exceed 9 feet from the ground. The top row of ties (highest row of ties) shall be no greater than 4 times the base ratio from the top platform down. Note: Federal OSHA allows the first row of ties to occur at 4 times the base ratio from the base plates up. Per Federal OSHA 1926.451 (c) (1) (ii), *"Guys, ties, and braces shall be installed according to the manufacturer's recommendations or at the closest horizontal member to the 4:1 height and be repeated vertically at locations of horizontal members every 20 feet (6.1 m) or less thereafter for scaffolds 3 feet (0.91 m) wide or less, and every 26 feet (7.9 m) or less thereafter for scaffolds greater than 3 feet (0.91 m) wide. The top guy, tie, or brace of completed scaffolds shall be placed no further than the 4:1 height from the top. Such guys, ties, and braces shall be installed at each end of the scaffold and at horizontal intervals not to exceed 30 feet (9.1 m) (measured from one end – not both – toward each other)."*

Scaffolding shall be tied to the structure with a double loop No. 12 gauge wire, single loop No. 10 gauge wire or equivalent means. Ties should be attached as close to the ledger of the frame as possible. Sometimes this is not practical or possible, therefore the Competent Person shall determine the best possible location for the tie. To additionally support the scaffold, bumps or standoffs are needed to create a "positive and negative tie". Tube and a clamp is a common and acceptable practice when stabilizing the scaffold system against the structure. The following page depicts some common attachment methods that may be used. Due to the needs and variations of scaffold setups, a modified version of tie attachment may be used. This shall be made at the determination of the Qualified Person.

Occasionally the installation of gravity pins will be required on the scaffold system. The installation of gravity pins is dependent upon a myriad of different circumstances that the Qualified Person shall evaluate as part of the scaffold conditions for a given project. At a minimum, scaffolds that are enclosed, have outrigger brackets longer than 2', cantilevered scaffolds and stair towers must have gravity pins inserted into the inside and outside of the lower frame legs to capture the entirety of the system. In general, conventional scaffolds that do not have containment and no other special circumstances exist, gravity pins are not required.

Examples of Typical Tie Attachments

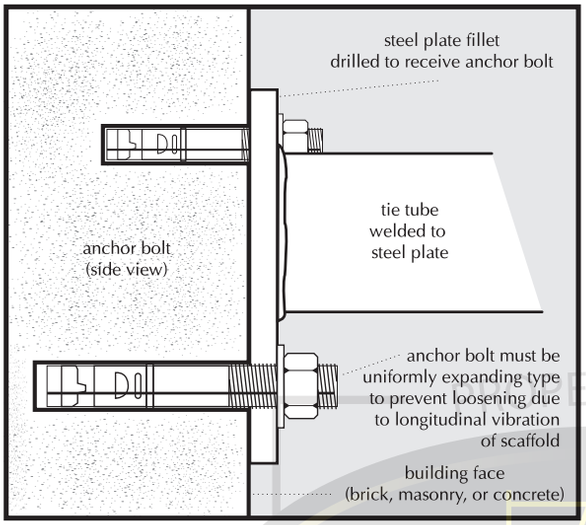

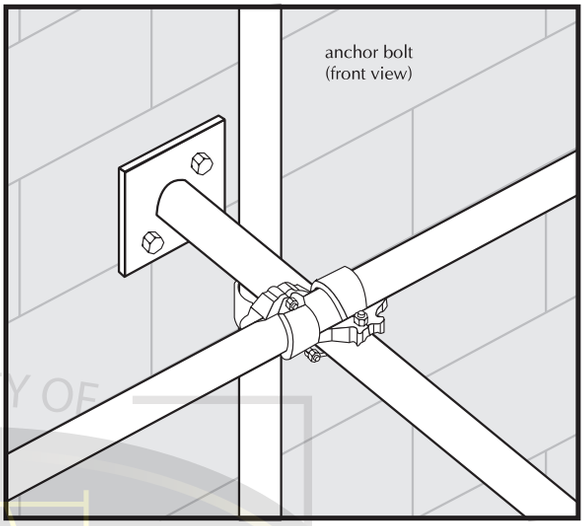

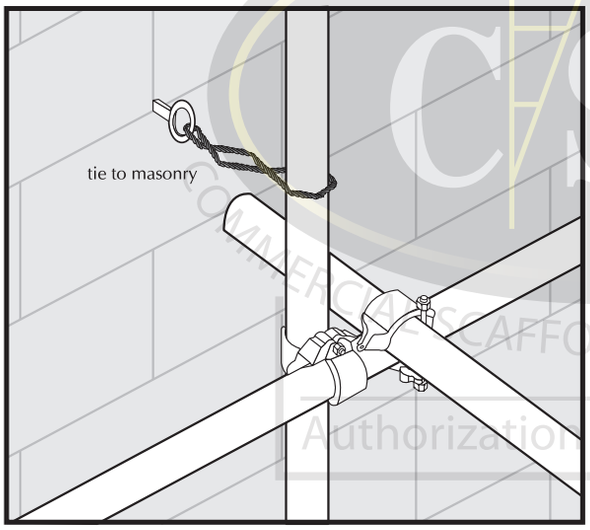

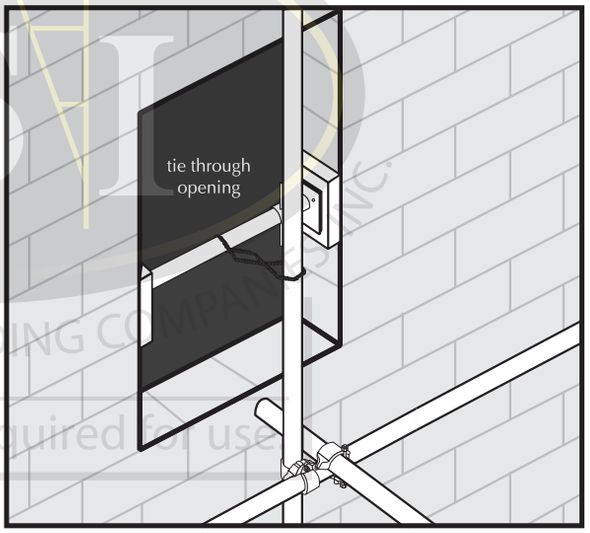

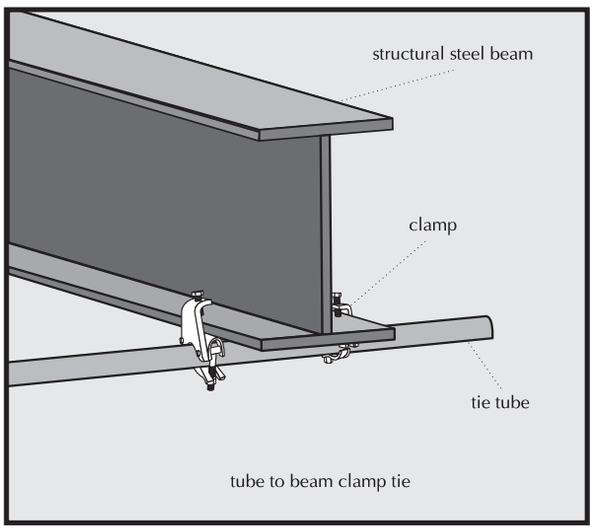

GUYED SCAFFOLDS

Free standing towers exceeding a base ratio of 3:1 (4:1 constructed outside California) must be restrained from tipping by guying or other means. A Qualified Person must design the guyed scaffold; a Competent Person must supervise the erection of the scaffold. There are, as with all scaffolds, some special precautions that must be noted when erecting, dismantling, or using a guyed scaffold.

1. Guys must be of wire rope, capable of supporting the expected horizontal loads of the scaffold with a safety factor of 4 considered.
2. All guys must have an equal and opposite guy.
3. All guys must be attached to a suitable ground anchor or other attachment capable of supporting intended loads without failure.
4. A minimum of 3 wire rope clips must be used to secure the wire rope. Make certain the rope clips are facing in the right direction; the load capacity of the clips may be decreased in half if the clips are not installed properly.
5. All wire ropes must be nominally pre-tensioned to remove slack. Due to the careful nature of which this operation must be completed, it is strongly recommended that an experienced erector carry out the tensioning of guys.
6. The guyed scaffold must be regularly and frequently inspected for strained or slack rope, especially before and after high winds are to be anticipated or occurred.
7. During dismantling, guys may only be removed when the scaffold has progressed to such a level that their removal will not affect the overall stability of the system.

GUYED SCAFFOLDS

The diagram below is what may be expected of a typical guyed scaffold.
NOTE: This layout is typical, and does not reflect an actual scaffold in the field.

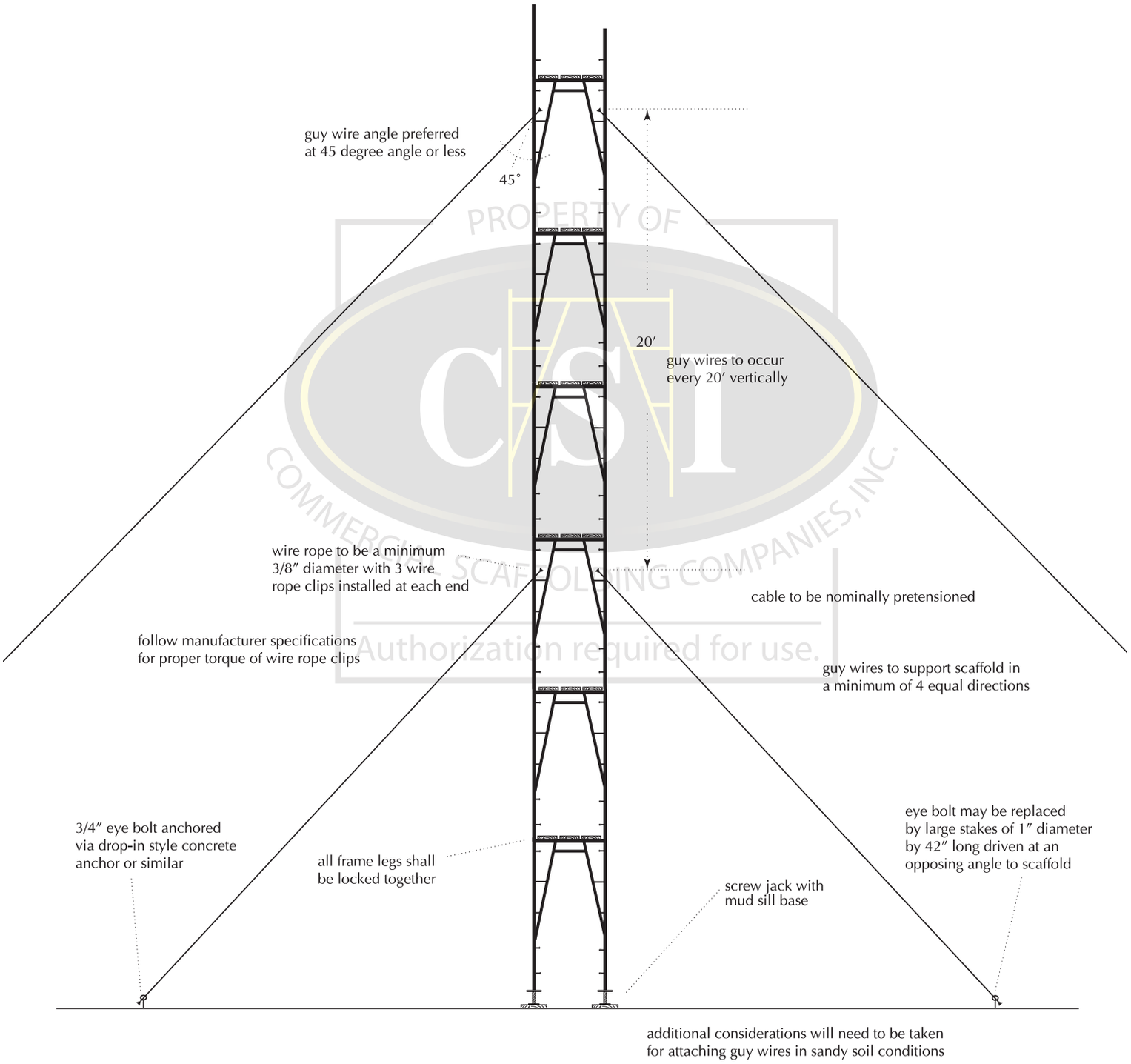

ENCLOSED SCAFFOLDS

Enclosed scaffolds must be designed by a person familiar and competent with this type of scaffold. When tarps, screens, nets, mesh, or plastic are placed on a scaffold system, it can increase horizontal loads substantially, especially during high winds or foul weather. Wind forces can cause the scaffold system to be either pushed in toward a structure or be pulled away from the structure. The sail effect that is created can be very dangerous and special caution must be made to ensure the frequency and strength of the ties is adequate for the anticipated loads. As a general rule of practice, tie locations must be increased by at least 20 percent above what minimum applicable standards require to ensure proper strength and rigidity has been achieved.

1. Ties must be of positive and negative type adequate for anticipated horizontal loads.
2. Preferably, ties must be as close to the ledger of the frame as possible.
3. All frames must be locked together by gravity locks or bolts.
4. If excessive high winds are to be expected, tarps should be bunched, or rolled together to minimize the sail effect that will be imposed on the scaffold.
5. A tie spacing of every leg horizontally and every floor line or a maximum of 16′ vertically is preferred.

CANTILEVER SCAFFOLDS

In some situations it is either preferable or necessary to erect a cantilever scaffold. A cantilever scaffold is one in which the majority of the weight of the scaffold is projected out over the base of the scaffold system. Because of the nature of this type of scaffold arrangement, unless supported properly, it can be very unstable.

Be sure to check the floor or roof where the scaffold will be placed to make certain it will support all the anticipated loads. Proper consultation with the Engineer of Record may be necessary in order to be able to ascertain if the floor or ceiling loads are capable of carrying the prescribed scaffold load.

Consideration to the eccentric and moment forces exerted on the scaffold system is very important. Due to the nature of these builds, either a Qualified Person familiar with cantilevered scaffold systems or a Registered Engineer will be necessary in designing these types of scaffold systems.

The cantilevered section should not be overloaded to prevent the danger of tipping. Because of the overhang, the system is not stable without the use of counterweights and/or attachment to the structure specifically designed to carry the imposed load. The system must be calculated for the loading conditions of each job. The total dead load of the scaffold system, as well as live load, must be calculated and proper design of the overall system shall be completed by a Qualified Person. This information must be communicated to the builder / engineer to determine if the leg loads applied will exceed the maximum allowable loading of the structure.

By using the formula **CW = (La) 4 / b,** we can figure the amount of counterweight needed to properly stabilize the cantilever scaffold. It is extremely important that the dead load and maximum live load expected of the cantilever end of the scaffold be calculated for determining minimum counterweight required.

CW	=	Counterweight	
L	=	Load	
a	=	Reach Distance	(Distance between fulcrum and end of cantilever)
b	=	Back Span Length	(Distance between fulcrum and back of truss)
4	=	Safety Factor (4:1)	

The diagram below depicts what can be expected of a typical cantilever scaffold.

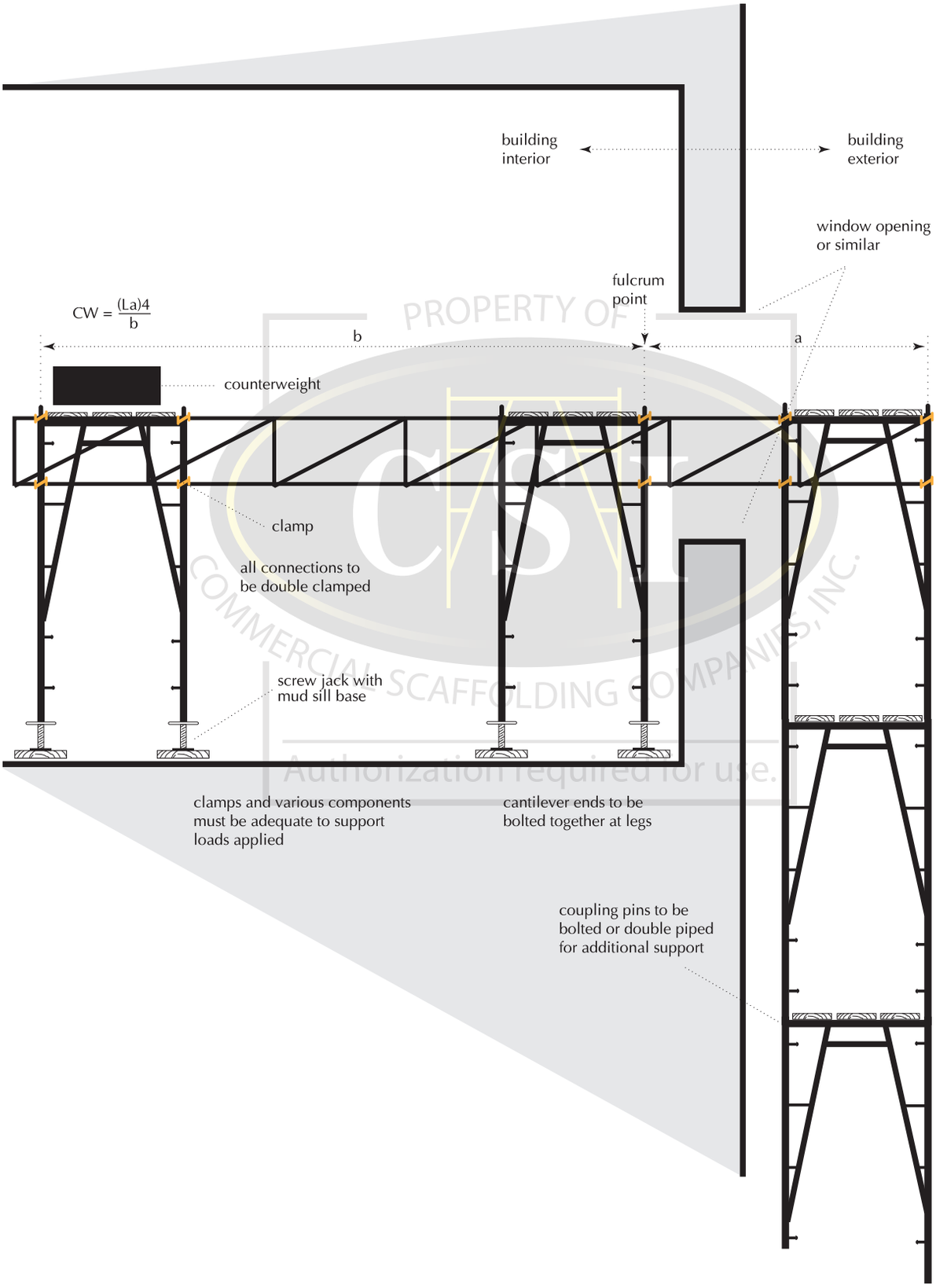

CANTILEVER SCAFFOLDS

As depicted below, the Qualified Person has many opportunities to create multiple configurations of cantilevered scaffolds.

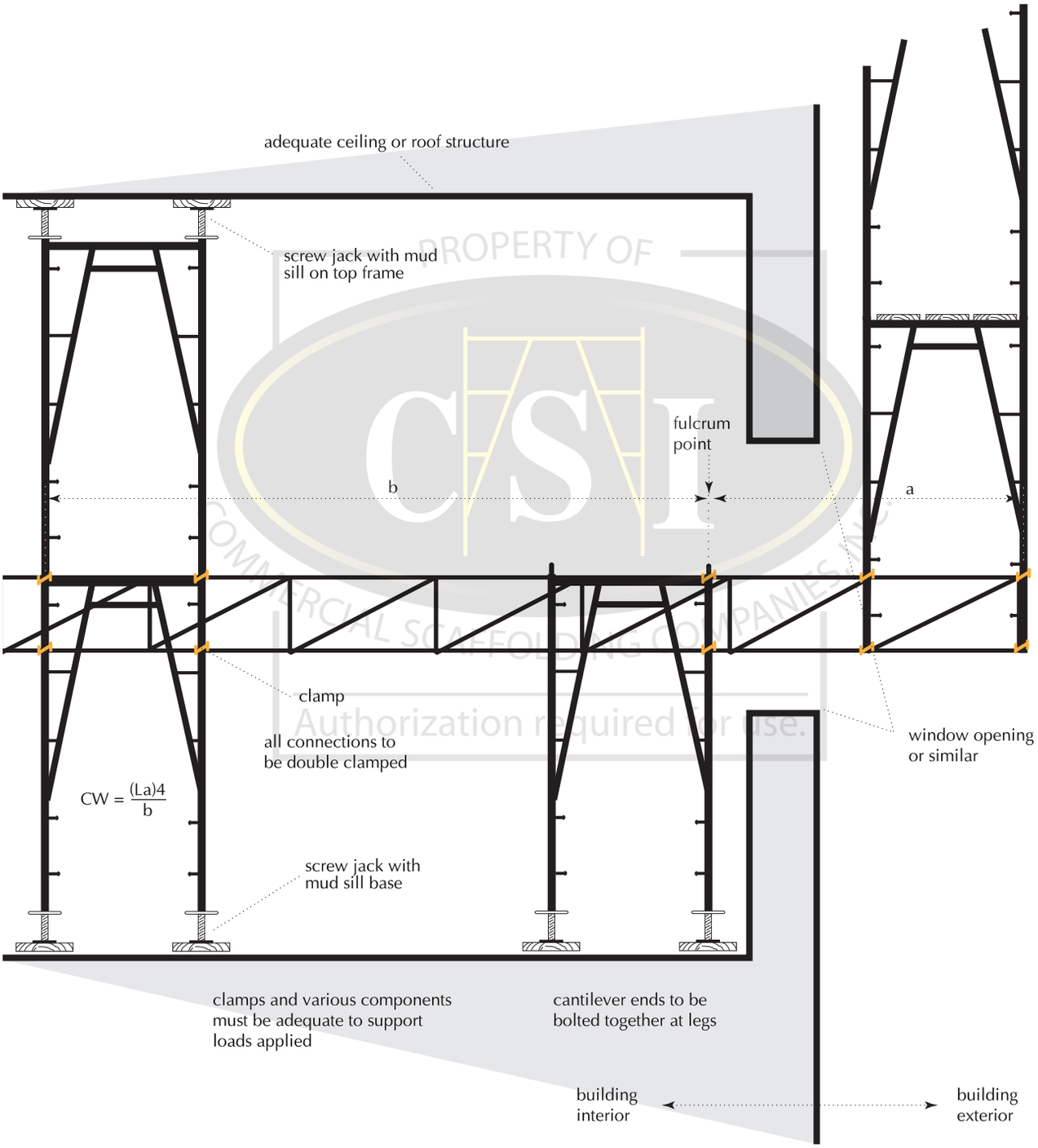

TRUSS SYSTEMS / PUTLOGS

Very often, due to jobsite conditions, there is a need to bridge large openings over equipment, roadways, etc. CSI manufactures trusses in length from 6′ to 42′. The trusses may be attached to the system via truss hangers or clamps. There are many methods and means for implementing the use of trusses. If the truss span exceeds 14 feet, kickers or knee braces must be used to help stabilize the scaffold and take the sway out of the system. If the truss spans a distance of more than 10′, cross goosers or tube and clamp must be used in between the trussing to keep trusses from bowing or rolling out of their respective positions.

The diagram below depicts what can be expected of a typical truss span opening. This is typically known as a "dance floor".

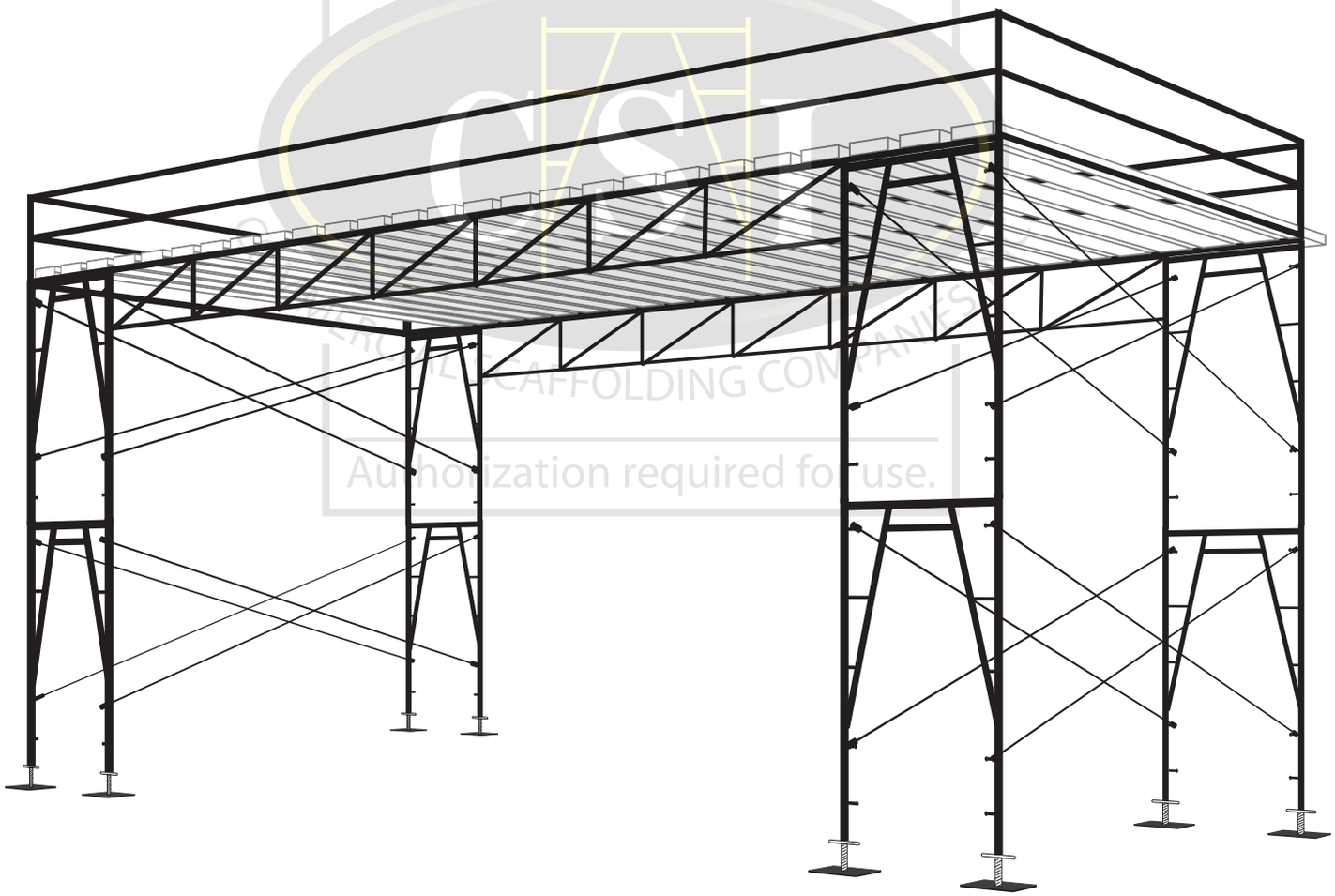

TRUSS SYSTEMS / PUTLOGS

There are many other applications in which putlogs / trussing may be implemented on CSI scaffolding.

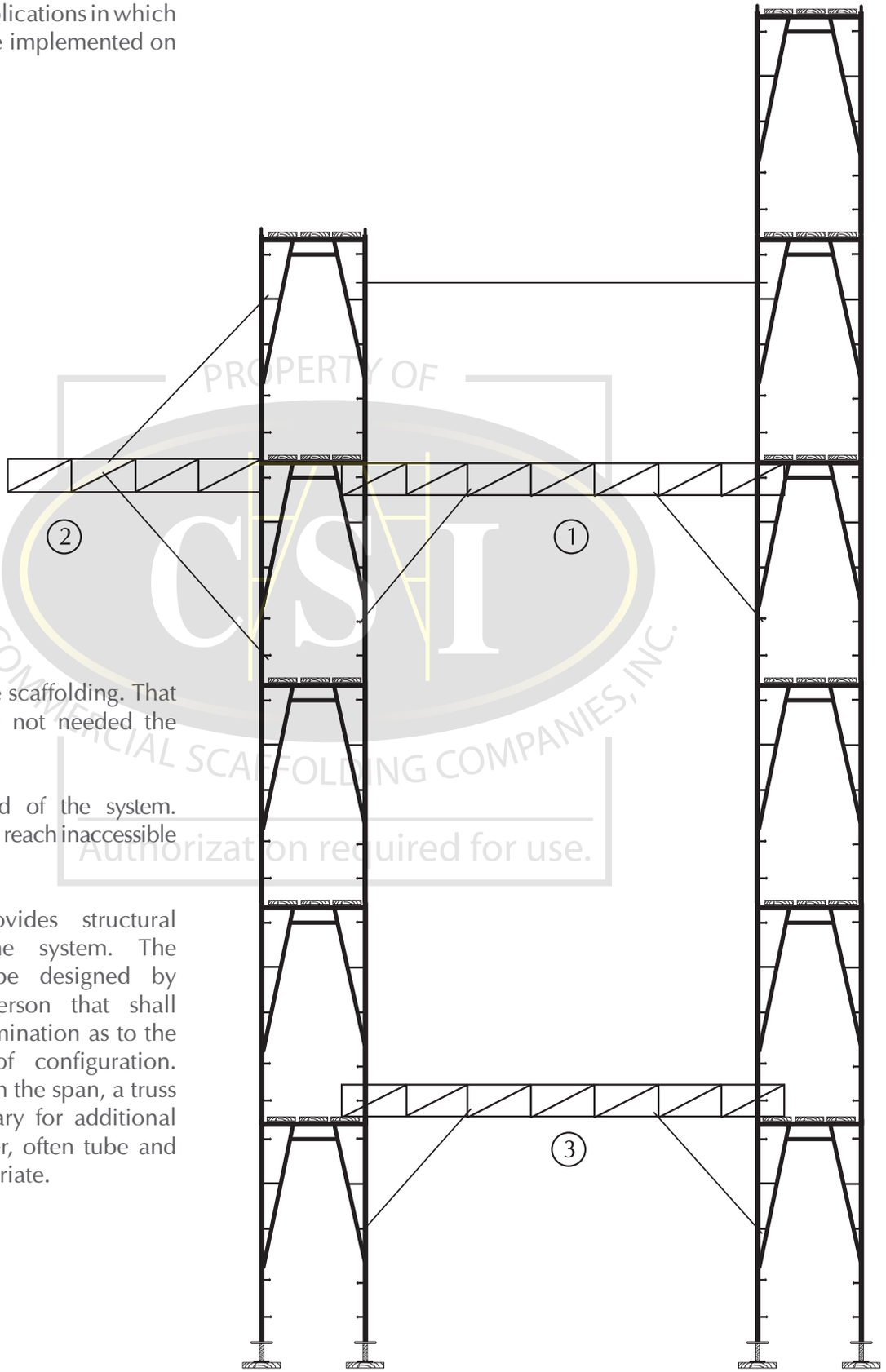

1. It is used to save scaffolding. That way frames are not needed the full height.

2. A cantilever end of the system. Allows the user to reach inaccessible places.

3. This truss provides structural stability to the system. The system must be designed by a Qualified Person that shall make the determination as to the best manner of configuration. Depending upon the span, a truss may be necessary for additional rigidity, however, often tube and clamp is appropriate.

ROLLING SCAFFOLDS

Rolling scaffolds are a great asset to many users. It allows personnel to access large areas without the need of a full stationary scaffold system. Rolling units are popular with painters, fire proofers, HVAC installers, and maintenance personnel. There are however, many considerations that must be taken when implementing such an asset.

1. If the height of the scaffold exceeds 3 times the minimum base dimension, outriggers or stabilizers will be required to further stabilize the rolling unit. In the case of Federal OSHA jurisdiction, a 4:1 base ratio is acceptable.
2. If screw jacks are used in combination with the caster wheels, the screw jack is not to expose more than 12" of thread.
3. Inspect the caster wheels for proper locking brake and rolling operation. If the wheel is chipped or bent discontinue use of caster.
4. Cross bracing must be installed on both sides of the rolling tower and on every frame level.
5. Sway braces must be installed when the height of the roller exceeds 20' to prevent racking, or every 20' of height thereafter the initial 20'. If planking is used instead of hook decks, sway braces must be installed regardless of height.
6. Check the working area to make sure there are no obstructions either in or on the floor which could interfere with the proper and safe use of the tower and create a hazard to the user.
7. Watch for overhead power lines when relocating the rolling tower. Accidents may occur when the user fails to be aware of overhead hazards.
8. Make certain guard rails are installed on platforms that exceed 7 1/2 feet in height. Federal OSHA allows scaffolds to be erected up to 10' in height prior to installing guard rails. It is recommended that all rolling towers be guard railed regardless of height.
9. Check the deck for full planking all the way across the bearer of the frame.
10. Check that the load on the caster does not exceed the capacity of the caster.
11. Check for proper access to the platform. End frames may be used as ladder access providing there is a continuous run of parallel rungs the full height of the roller.
12. Check all frame connections for proper locking devices. Frames must be pinned together by either means of a gravity lock or bolt.
13. CSI does not approve of users self-propelling or "surfing" mobile scaffolds.

Rolling Scaffold diagram:

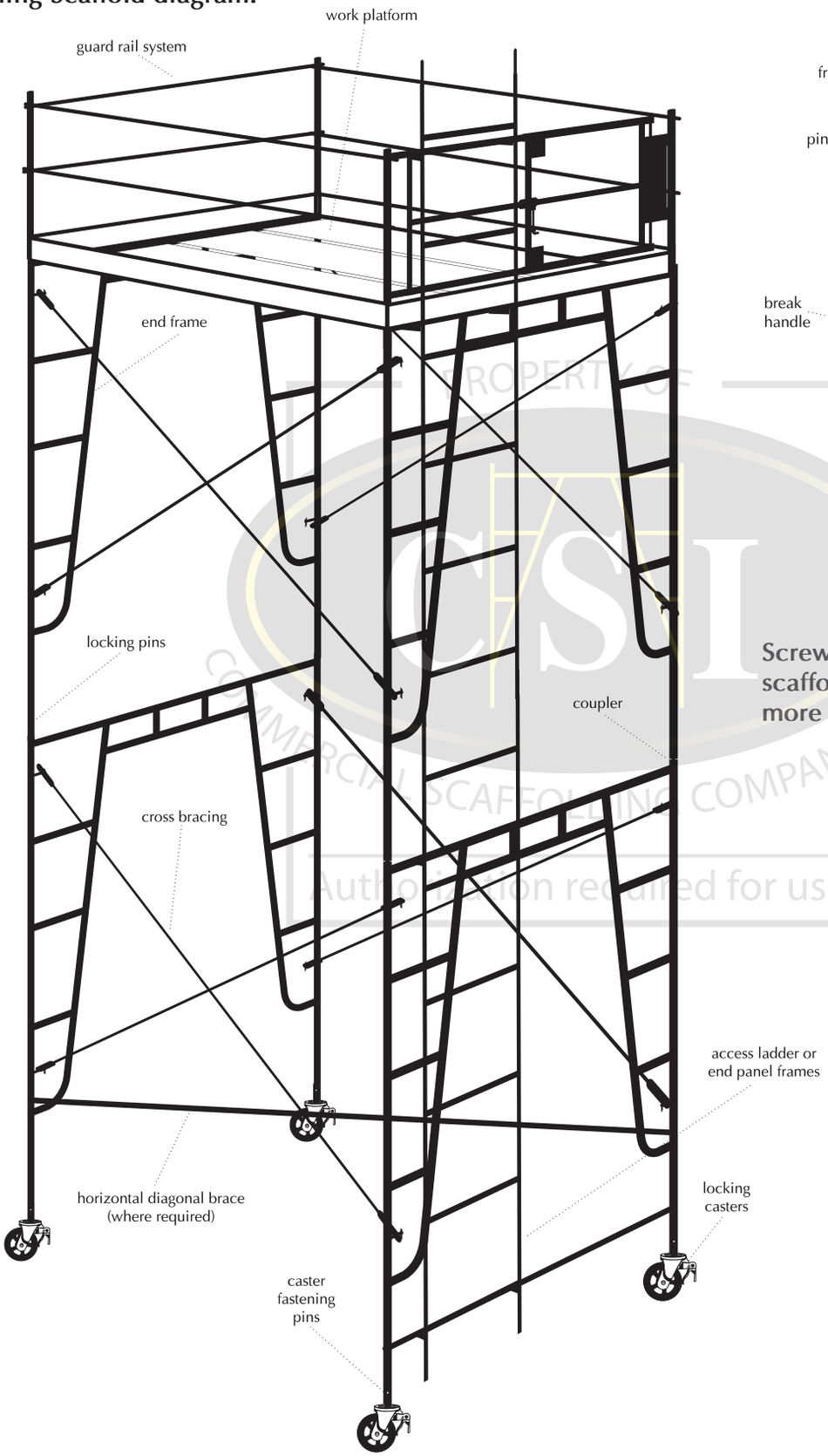

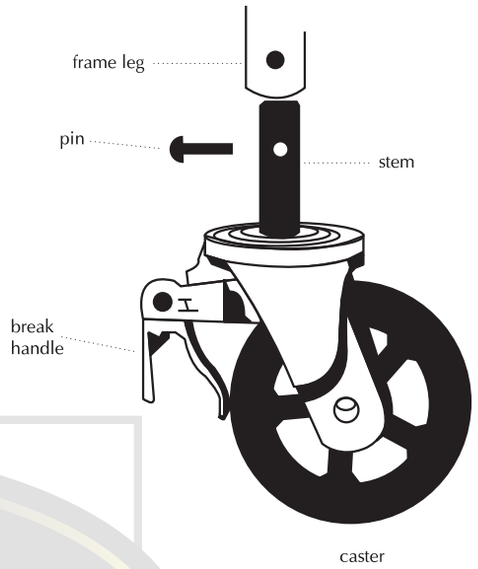

Screw jacks on rolling tower scaffolds may not be extended more than 12″.

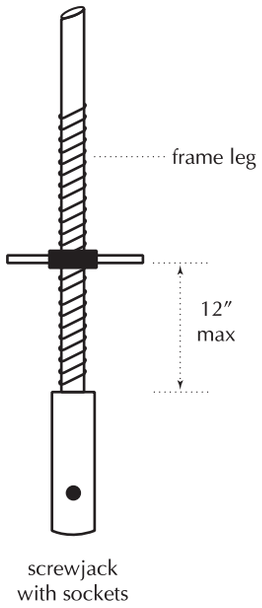

SCAFFOLD ACCESS INFORMATION

All completed scaffolds must have some proper means of access as defined by OSHA. All ladders, if used for access of scaffold, must conform to Article 25 of the Construction Safety Orders or 29 CFR regulations contained in Subpart X.

1. Ladders must provide safe access to all working levels.
2. Ladder rungs must be in good condition. No missing, bent or damaged rungs permitted.
3. Ladders must be affixed to the scaffold and located in a manner to not disturb the stability of the scaffold during use.
4. Side rails must extend at least 36 inches above the platform landing at its highest point.
5. Ladders must be positioned such that the bottom rung is within 24 inches of the walking/working surface.
6. Ladders shall have a minimum rung length of 11 1/2 inches.
7. Ladders must contain a uniformed rung spacing not to exceed 16 3/4 inches.
8. Rest platforms must occur at intervals not to exceed 35 feet.

There are various means of access CSI may provide on our scaffold systems. This will depend on jobsite conditions and the needs / wants of the user / client. Options for access to users include a clamp on attachable ladder, stair case, or ladder hatch decks with landing platforms every 6'8". All methods of access have been designed to comply with manufacturer's recommendations and applicable OSHA standards. If there are any questions as to the proper use of the ladder or the specific application in which the ladder system is being used, please consult with CSI's Qualified Person.

COMPLETION

Upon completion of the scaffolding, the Competent Person will place a green tag that indicates "OK, ready to use". The purpose will be to communicate to others that the scaffold was completed in a compliant state by a Competent Person. The green tag validity is only for the actual date as listed on the tag.

A yellow tag allows access to the scaffold but caution must be practiced due to an incomplete or unsafe area of the system. Examples of reasons why a yellow tag is being used include guard rails that cannot be installed due to building obstructions, such as piping, plumbing, HVAC components, etc. In this example of an incomplete guard rail or platform, the user must wear a personal fall arrest device in order to access the scaffold if the fall exposure exceeds 7 1/2 feet to a lower level.

A red tag will indicate an incomplete or unsafe scaffold and for no reason shall anyone except the scaffold crew, under the supervision of a Competent Person, access the scaffold. The only reason a scaffold crew is to access the scaffold is for assembling, dismantling or for making modifications to the scaffold for making it safer.

If there are any doubts about the condition of the scaffold, or a scaffold tag is missing, please contact CSI for re-inspection.

DISMANTLING

1. Prior to dismantling a scaffold, it is very important that a careful check be made to ensure the scaffold has been erected properly and that no structural alterations have been made. It is particularly important to check that the correct amount of ties and braces are in position. If there is a deficiency in the amount of ties or proper bracing, these items must be installed **prior** to dismantle in order to make certain that the system is structurally sound.
2. Consideration must be given to the effect individual components may have on the scaffold system prior to dismantle procedure begins. Do not remove bracing on levels lower than the one being dismantled.
3. Do not allow scaffold components to accumulate on the scaffold platform being dismantled as this creates a falling object and tripping hazard. Scaffold parts must be lowered to the ground by either passing man by man, or hoist. Never drop material to the ground from heights.
4. Do not remove ties until the scaffold above has been dismantled to that level.
5. Caution must be taken when removal of guard rails takes place as this may create a fall exposure to the dismantler.
6. Always access levels by proper means. Never climb cross bracing or guard rails.
7. Scaffold planks can be damaged when thrown from a scaffold. Lower scaffold planks in an orderly manner.
8. Where dismantling operations are taking place, a controlled access zone must be created in order to protect persons not involved with dismantling operations from falling objects.
9. If there are tarps or screens attached to the scaffold, they must be removed prior to dismantling the scaffold system.
10. If for any reason the scaffold is unstable, the scaffold must be made safe, sound, and secure prior to dismantling.
11. Supervisors must never allow an unsafe jobsite condition to exist. If there is a hazard recognized, it must be immediately remedied prior to exposing employees to a potentially dangerous situation.

SCAFFOLD USER INFORMATION

All customers who use CSI's scaffold must maintain an onsite safety plan for the scaffold system and also have onsite engineered plans as obtained from CSI when required. CSI takes great care in erecting a scaffold that will be safe for the user and exceeds all applicable safety procedures and regulations required by Federal OSHA, and any state OSHA regulations, or local statutes.

Quick Guide to User Checklist:

1. Are the planks in good working order as outlined in the plank inspection section of this manual?
2. Are locking devices on scaffold components in good working order?
3. Are all scaffold members free from bends, kinks, dents, cracks, and excessive rust?
4. Has the scaffold system been erected following CSI procedure? Does it comply with local, federal and/or California OSHA statutes?
5. Is the scaffold erected on good, solid foundations?
6. Are there any safety components removed that may create a fall exposure to the user? Are all platforms fully planked and guard railed as specified by OSHA?
7. Are the ties installed at specified intervals required by CSI and OSHA?
8. Does the scaffold system have proper means of access, i.e. ladders, staircases or hatch deck system?
9. Are there any trades or work being conducted near the scaffold that may create a hazard to the users?
10. Are minimum electrical line clearances maintained as outlined by OSHA?
11. Are there any ties or bumps that have been removed that may create an unstable scaffold?
12. Is there any trenching or undermining of the scaffold legs that may cause an unstable scaffold?

The Do's and Don'ts of Scaffold Safety

1. Scaffolds shall be inspected prior to **each work shift by the user** to make certain the scaffold has not been altered and is in safe working condition.
2. Scaffolds shall be accessed only by manufacturer's ladder systems or by approved access system. Climbing cross bracing, rails, or frames is not a safe acceptable means of safe access.
3. Exercise caution when entering or leaving a scaffold platform. Maintain a three point contact on the ladder system at all times.
4. Scaffolds shall not be altered by persons unauthorized to do so. **Only** CSI Competent Persons may alter the scaffold system.
5. Do not use scaffold platforms that do not have proper guard railing as specified by OSHA.
6. Toe boards must be over points of access or egress or where required by federal OSHA.
7. Check that platforms are free of excess material or slippery substances. Materials must be made secure to keep them from shifting or falling off the scaffold.
8. In California, toe boards may be omitted on scaffold platforms that exceed 7 1/2 feet in height providing

a controlled access zone is created to prevent other workers from entering the area. If this method of falling object protection is used, a safety monitor must be made available to warn others not to enter area.

9. Do not place items on scaffold platforms to increase working heights, unless it is CSI approved scaffold material. The use of unapproved ladders, buckets, stools, boxes or any other makeshift device which increases working height is strictly prohibited.
10. Never stand on guard rails while working.
11. Do not place planks on scaffold guard railing; platforms can exert tremendous forces that guard railing components are not designed for.
12. **Do not overload the scaffold system;** distribute weight evenly on the scaffold platform. Most crafts require 25 pounds per square foot. Double check scaffold weight rating indicated on the CSI approved scaffold plans. There may be limits to actual working levels combined with the load rating of the scaffold system. Every job is different and care must be taken so that the scaffold system as a whole is not overloaded. LOADS MUST BE EVENLY DISTRIBUTED ON THE SCAFFOLD PLATFORM!
13. Never store heavy materials on scaffold planks unless permitted by the scaffold designer.
14. The maximum allowable deflection for LVL scaffold planks is 1 5/8″ for an 8′ span and 2″ for a 10′ span (see Maximum Allowable Deflection table in the Plank Technical Information section on page 49).
15. If a scaffold plank deflects more than shown in the Maximum Allowable Deflection table in the Plank Technical Information section (page 49), or makes cracking noises, it is being overloaded. Scaffold planks that have been overloaded should be immediately removed from service, then visually inspected and field tested before reuse (see Material Inspection Procedures section on pages 8–10).
16. Never jump or bounce on scaffold planks.
17. Never use scaffold planks as loading ramps, walkways through mud, or anything other than scaffold decking. Improper use might cause damage that makes the scaffold planks unsafe.
18. Never remove planks, creating large gaps in the scaffold platform. Scaffold platforms must be fully planked with no gaps larger than 1 inch. However, when using outrigger brackets, a larger gap is acceptable but not to exceed 2 inches.
19. Only scaffold grade wood planking, or fabricated planking and decking material meeting scaffold use and OSHA requirements shall be used on CSI's scaffold systems.
20. Never allow anyone to work in an unsafe condition; supervisors are responsible for the safety and health of their workers.
21. **Never remove guard rails!**
22. Never use scaffold for uses other than those approved by CSI. Scaffold is NOT an acceptable means for fall arrest attachment unless written approval is obtained from CSI. Falls create many thousands of pounds of force; due to the multitude of scaffold configurations and body harness attachment points, never tie off to CSI scaffold unless you have a diagram specifically outlining body harness attachment points. It is much preferred to find an attachment for a fall arrest system that is separate from the scaffold system.
23. If outriggers are used, the scaffold must be braced, guyed, locked, or tied to prevent tipping.
24. Special consideration must be used when using tarps. Frames must be locked and an adequate number of ties and standoffs must be used. Never cut ties or remove standoffs.
25. If tarps are used, they must be rolled together before the work shift is over. Tarps can create a sail effect if strong winds occur.

SCAFFOLD USER INFORMATION

All persons using the scaffold must attend a Scaffold User Awareness class. Such classes outline hazards associated with scaffold use. No alterations to the scaffold shall be made by the user. Only the CSI Competent Person or persons under the supervision of the CSI Competent Person shall be allowed to alter the scaffold system. An altered scaffold is potentially an unsafe scaffold and may pose many dangers to employees who do not have the knowledge of an unsafe or altered scaffold.

Construction is an extremely dangerous industry to work in. The measures contained in this manual are put in place to keep all workers in this hazardous environment safe. Safety is always a paramount concern, and injuries, accidents, or near misses must be reported immediately to a supervisor. If there are any questions about the information contained in this manual or the scaffold on your jobsite is in questionable state, please feel free to contact CSI directly for further information or to conduct an onsite safety inspection.

STANDARD SCAFFOLD LAYOUT

The following pages depict typical scaffold layout for bracing patterns, load limitations and tie patterns. Adherence to these layouts is important to make the scaffold as structurally sound as possible. If there are any questions regarding the layout or tie detail as provided, please contact a CSI Qualified Person.

TYPICAL 40′ HIGH SCAFFOLD

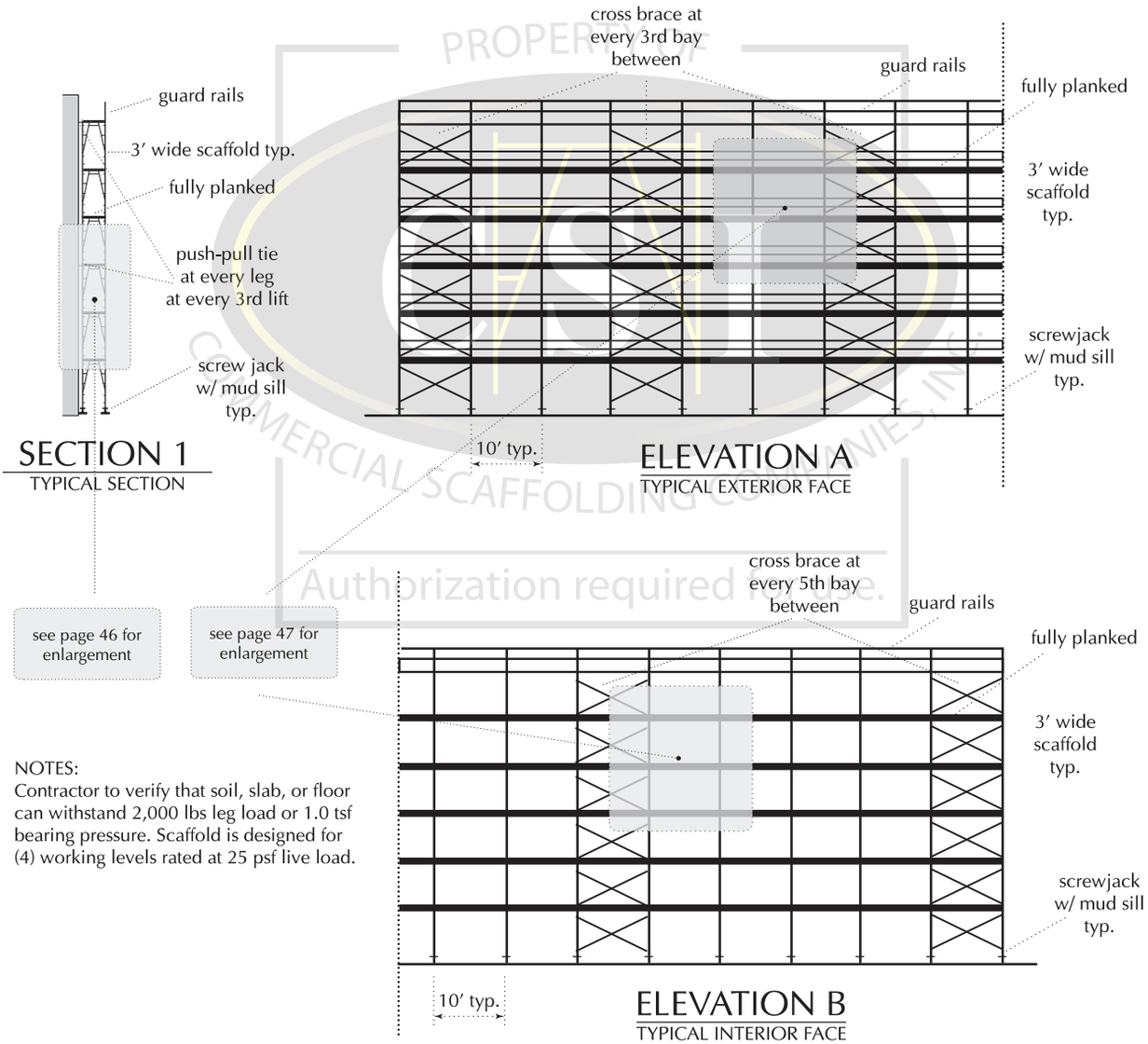

NOTES:
Contractor to verify that soil, slab, or floor can withstand 2,000 lbs leg load or 1.0 tsf bearing pressure. Scaffold is designed for (4) working levels rated at 25 psf live load.

STANDARD SCAFFOLD LAYOUT

TYPICAL 80′ HIGH SCAFFOLD

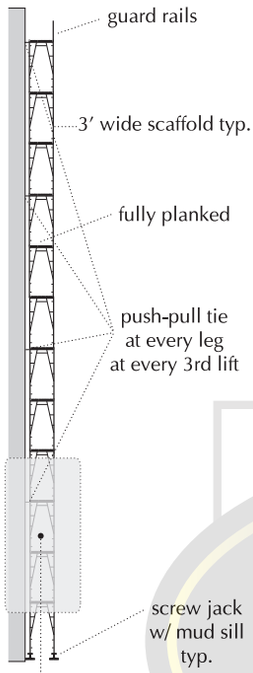

SECTION 1
TYPICAL SECTION

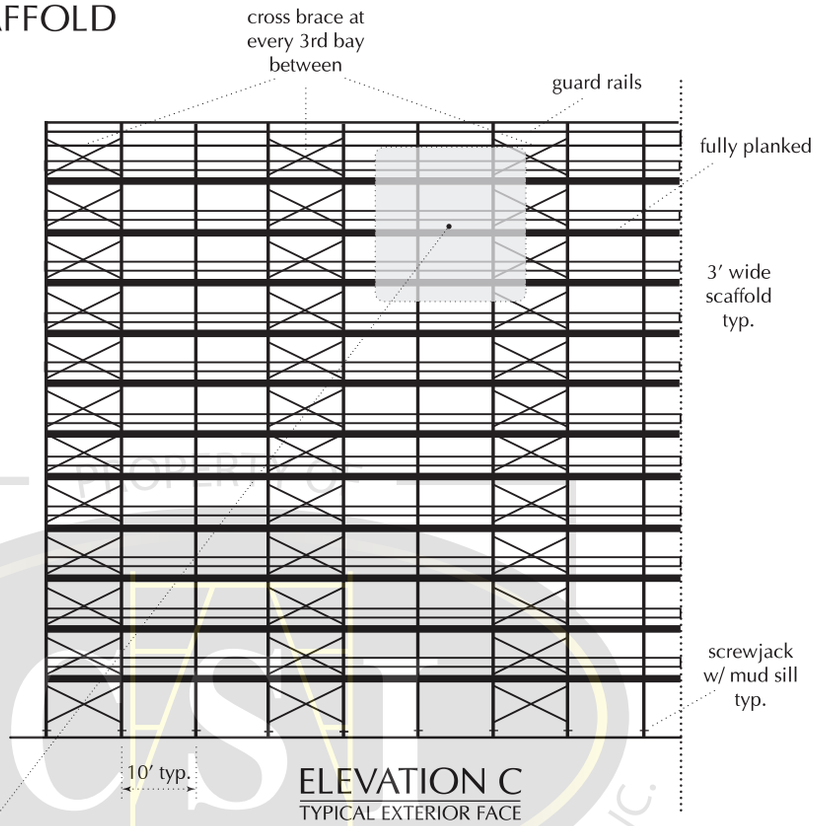

ELEVATION C
TYPICAL EXTERIOR FACE

see page 46 for
enlargement

see page 47 for
enlargement

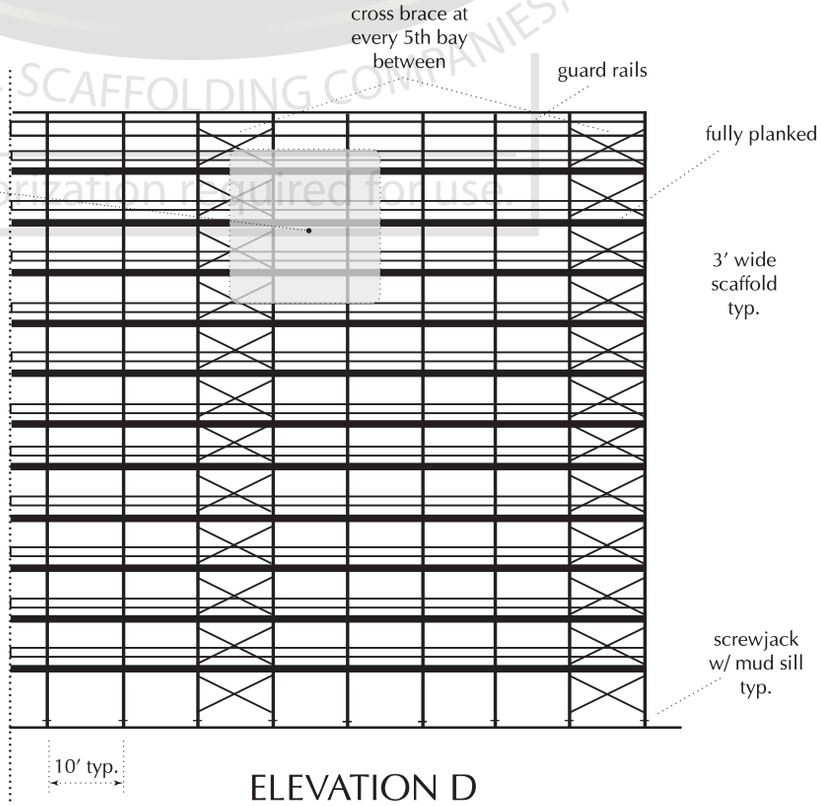

ELEVATION D
TYPICAL INTERIOR FACE

NOTES:
Contractor to verify that soil, slab, or floor can withstand 2,200 lbs leg load or 1.1 tsf bearing pressure. Scaffold is designed for (2) working levels rated at 25 psf live load.

STANDARD SCAFFOLD LAYOUT

TYPICAL 120′ HIGH SCAFFOLD

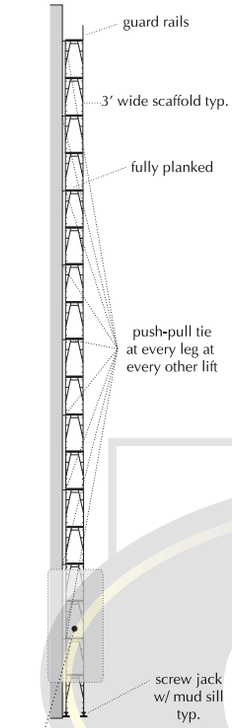

SECTION 1
TYPICAL SECTION

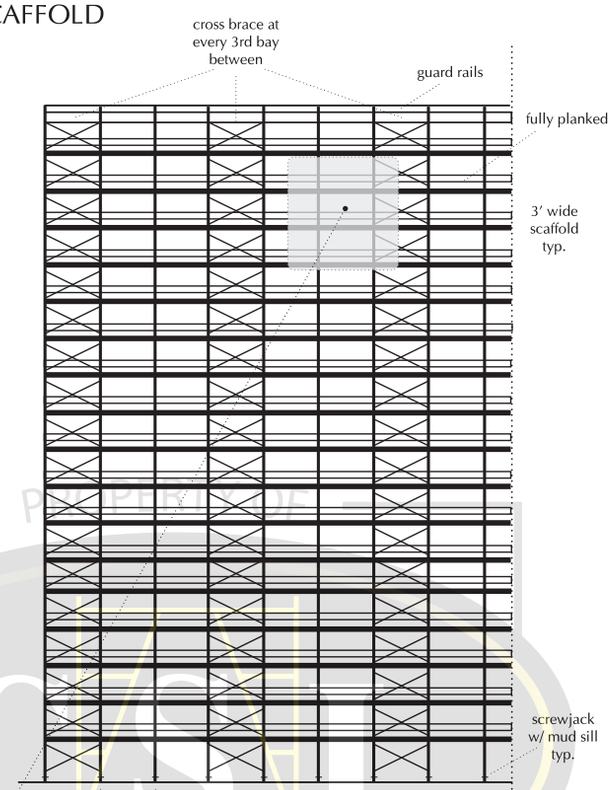

ELEVATION E
TYPICAL EXTERIOR FACE

see page 46 for enlargement

see page 47 for enlargement

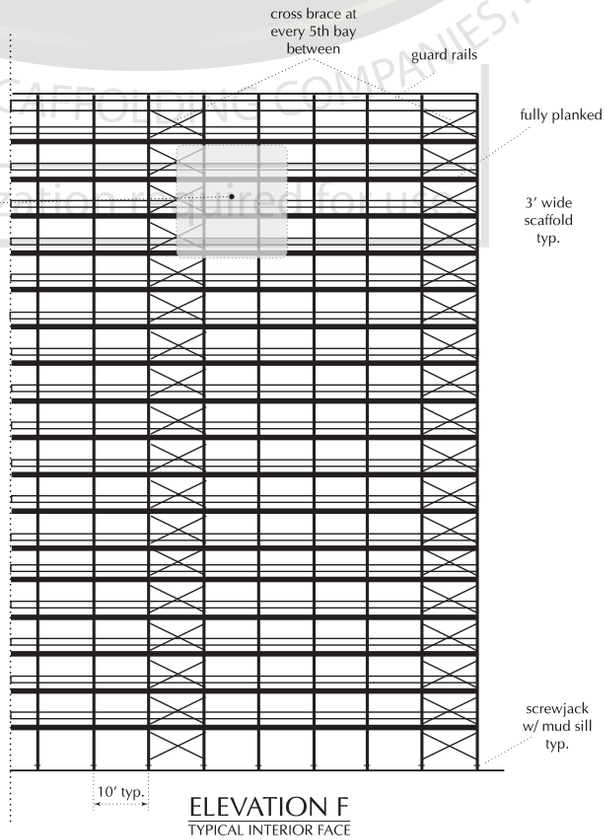

ELEVATION F
TYPICAL INTERIOR FACE

NOTES:
Contractor to verify that soil, slab, or floor can withstand 3,000 lbs leg load or 1.5 tsf bearing pressure. Scaffold is designed for (2) working levels rated at 25 psf live load.

STANDARD SCAFFOLD LAYOUT

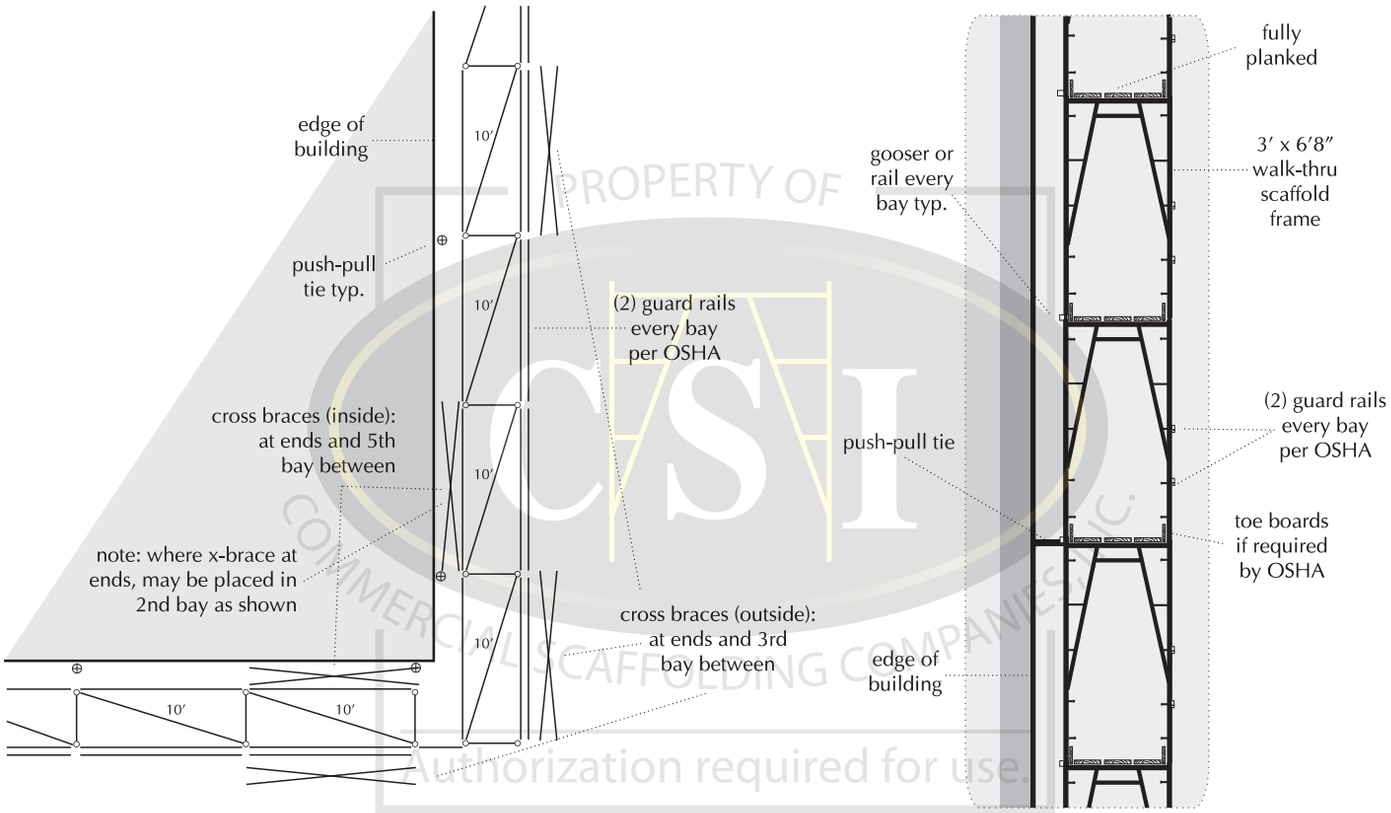

PLAN VIEW

SECTION 1
ENLARGED
(from pages 43-45)

STANDARD SCAFFOLD LAYOUT

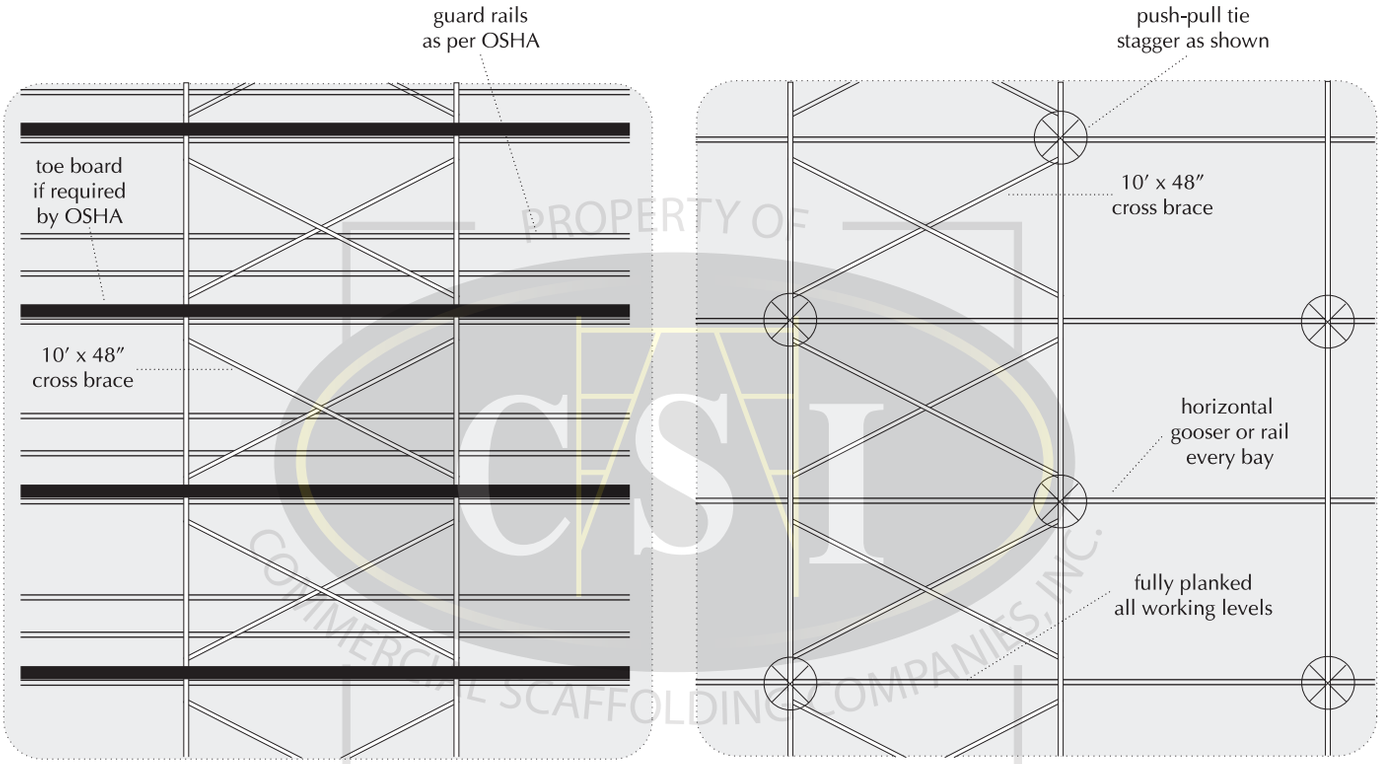

ELEVATION A, C, E
ENLARGED
(from pages 43-45)

ELEVATION B, D, F
ENLARGED
(from pages 43-45)

NOTES:

Push-Pull Ties

For scaffold 1-12 frames high, tie top and every third frame vertically; every row in staggered formation.

For scaffold 12-18 frames high, tie top and every other frame vertically; every row in staggered formation.

LVL SCAFFOLD PLANK DESIGN PROPERTIES

LVL SCAFFOLD PLANK DESIGN PROPERTIES		
Plank Thickness	1 3/4″ or less	over 1 3/4″
Flexural Stress, F_b	2,900 psi	2,400 psi
Modulus of Elasticity, E	2.5×10^6 psi	2.5×10^6 psi
Horizontal Shear Stress, F_v	145 psi	145 psi
Coefficient of Variation (MOR)	12%	12%

General Notes

- Design properties are determined in accordance with ANSI A10.8-2001. Appendix C
- These properties apply only to laminated veneer lumber (LVL) scaffold planks used in conditions where the moisture content of the plank is not expected exceed 19%. These values apply only to planks used in the flat orientation.
- F_b, E, and F_v shall be adjusted by a factor of 0.80 when used in conditions where the moisture content of the plank is expected to exceed 19%.
- Fastener values (nails, bolts, screws) shall be as provided for sawn Douglas fir per 2001 National Design Specification® for Wood Construction (NDS®).
- No increases in allowable unit stress are included for load-sharing systems.
- Values are for new or like-new product.

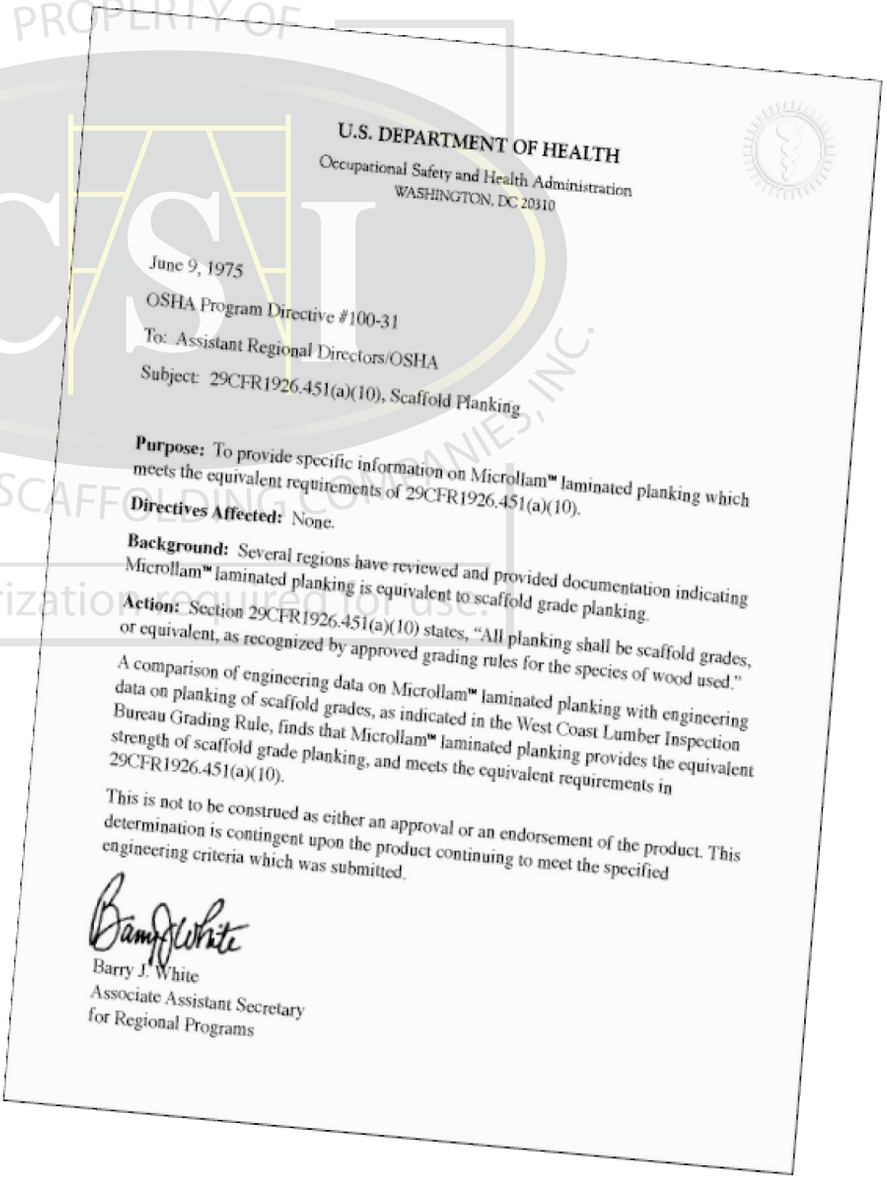

U.S. DEPARTMENT OF HEALTH
Occupational Safety and Health Administration
WASHINGTON, DC 20310

June 9, 1975

OSHA Program Directive #100-31

To: Assistant Regional Directors/OSHA

Subject: 29CFR1926.451(a)(10), Scaffold Planking

Purpose: To provide specific information on Microllam™ laminated planking which meets the equivalent requirements of 29CFR1926.451(a)(10).

Directives Affected: None.

Background: Several regions have reviewed and provided documentation indicating Microllam™ laminated planking is equivalent to scaffold grade planking.

Action: Section 29CFR1926.451(a)(10) states, "All planking shall be scaffold grades, or equivalent, as recognized by approved grading rules for the species of wood used."

A comparison of engineering data on Microllam™ laminated planking with engineering data on planking of scaffold grades, as indicated in the West Coast Lumber Inspection Bureau Grading Rule, finds that Microllam™ laminated planking provides the equivalent strength of scaffold grade planking, and meets the equivalent requirements in 29CFR1926.451(a)(10).

This is not to be construed as either an approval or an endorsement of the product. This determination is contingent upon the product continuing to meet the specified engineering criteria which was submitted.

Barry J. White
Associate Assistant Secretary
for Regional Programs

U.S. SPAN TABLE

ALLOWABLE SPANS FOR LVL SCAFFOLD PLANK								
Condition		Live Loading	1 1/2″ x 9 1/4″	1 1/2″ x 9 1/2″	1 1/2″ x 11 1/4″	1 1/4″ x 9″	1 3/4″ x 9 1/2″	1 3/4″ x 11 3/4″
DRY USE Moisture Content ≤ 19%	Simple Span	50 psf	10′6″	10′6″	10′6″	12′0″	12′0″	12′0″
		75 psf	9′0″	9′0″	9′0″	10′6″	10′6″	10′6″
		one person	10′6	10′6″	11′6″	12′6″	13′0″	14′0″
		two person	8′0″	8′6″	9′0″	10′0″	10′0″	11′0″
		three person	6′0″	6′0″	7′0″	7′6″	8′0″	9′0″
	Two Span *	50 psf	11′0″	11′0″	11′0″	13′6″	13′6″	13′6″
		75 psf	9′6″	9′6″	9′6″	11′6″	11′6″	11′6″
		one person	12′0″	12′0″	14′6″	16′0″	16′6′	20′6″
		two person	8′6″	9′0″	10′0″	10′6″	11′0″	12′6″
		three person	6′6″	6′6″	7′6″	8′0″	8′0″	9′6″
WET USE 19% < Moisture Content < 30%	Simple Span	50 psf	9′6″	9′6″	9′6″	11′0″	11′0″	11′0″
		75 psf	8′6″	8′6″	8′6″	10′0″	10′0″	10′0″
		one person	9′6″	9′6″	10′6″	11′6″	11′6″	12′6″
		two person	7′6″	7′6″	8′0″	9′0″	9′0″	10′0″
		three person	5′0″	5′6″	6′0″	6′6″	6′6″	7′6″
	Two Span *	50 psf	10′6″	10′6″	10′6″	12′6″	12′6″	12′6″
		75 psf	9′0″	9′0″	9′0″	10′6″	10′6″	10′6″
		one person	10′6″	11′0″	12′6″	14′0″	14′6″	17′6″
		two person	7′6″	8′0″	9′0″	9′6″	10′0″	11′0″
		three person	5′6″	5′6″	6′6″	6′6″	7′0″	8′0″

* Two-span values indicate the most restrictive span lengths considering live loads on one or both spans.

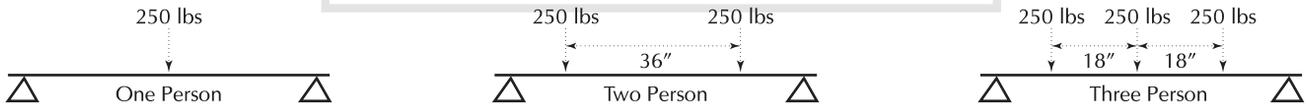

General Notes

- Design load deflection is limited to L/60.
- Spans shown are considered the distance between the center lines of bearers. Actual LVL scaffold plank lengths will be greater due to overhangs or overlaps specified in ANSI A10.8.
- Two span values assume both spans have equal lengths.
- Uniform and person loads shown are defined in ANSI A10.8. Proper LVL scaffold plank selection must be based on the most restrictive load case anticipated when planks are in service.

MAXIMUM ALLOWABLE DEFLECTION						
Plank Span	6′	8′	10′	12′	14′	16′
L/60	1 1/4″	1 5/8″	2″	2 1/2″	2 7/8″	3 1/4″

MECHANICAL EVALUATION AND TESTING

If you choose to mechanically test your wood scaffold planks, avoid test procedures that involve jumping or bouncing on them. These methods could actually cause damage. Instead, use a nondestructive test procedure such as the following:

1. Make sure the plank is free from built-up dirt and debris.
2. Center the plank on a scaffold frame, or similar structure, that has been set up on a level surface. The plank may overhang one or both sides of the frame without affecting the test results, provided that the plank touches both supports.
3. Identify a stationary point of reference, separate from the frame, from which to measure the location of the plank before and after loading. This could be the ground directly below the plank; you could measure with a tape measure or attach a tape measure to a vertical pole and stand it up next to the plank.
4. Preload the plank with approximately 20 lbs to settle the plank on the frame. Measure and record the deflection of the plank under the preload.
5. Determine the test load to be applied to the plank from the Test Loads table. Place the load slowly on the plank. Measure and record the deflection of the plank under the test load plus the preload.
6. Calculate the difference between the measurements in steps 4 and 5 to get the deflection of the plank under the text load. Compare this number to the Maximum Deflection shown in the Test Loads table.
7. Examine the bottom of the plank for face breaks while the plank is loaded. If you see face breaks, remove the plank from service.
8. Listen for cracking noises during the test; if you hear cracking noises, remove the plank from service.
9. Turn the plank over and repeat this procedure.

Any plank that deflects more than the Maximum Deflection shown in the Test Loads table should be removed from service.

General Notes

- Bending stresses induced by the test loads approximate allowable design stresses for dry, untreated planks.
- The Maximum Defection shown is 25% higher than the amount calculated using the design modulus of elasticity. This is to account for the variability of the material and moisture content of 19% or less.
- Deflection is directly proportional to load. If the test load used is 20% lower than the test load shown, the Maximum Deflection shown should be decreased by 20%.

TEST LOADS FOR LVL SCAFFOLD PLANK

Plank Size	Test Span	Test Load (lbs)	Maximum Deflection
1 1/2″ x 9 1/4″	7′	480	1.29″
	8′	420	1.69″
	10′	340	2.67″
	14′	240	5.18″
1 1/2″ x 9 1/2″	7′	490	1.29″
	8′	430	1.69″
	10′	340	2.60″
	14′	250	5.25″
1 1/2″ x 11 3/4″	7′	610	1.30″
	8′	530	1.68″
	10′	430	2.66″
	14′	300	5.10″
1 1/4″ x 9″	7′	480	0.84″
	8′	420	1.09″
	10′	330	1.68″
	14′	240	3.35″
1 3/4″ x 9 1/2″	7′	500	0.83″
	8′	440	1.09″
	10′	350	1.69″
	14′	250	3.31″
1 3/4″ x 11 3/4″	7′	620	0.83″
	8′	540	1.08″
	10′	430	1.68″
	14′	310	3.32″
2″ x 12″	14′	340	2.39″
	16′	300	3.14″
	18′	270	4.03″
	20′	240	4.91″
2 1/4″ x 11 3/4″	14′	420	2.11″
	16′	370	2.78″
	18′	330	3.53″
	20′	300	4.40″
2 1/2″ x 11 3/4″	14′	520	1.91″
	16′	460	2.52″
	18′	410	3.20″
	20′	370	3.96″

PLANK TECHNICAL INFORMATION

Planks that fail a load test, yet show no signs of damage, may be too wet. To determine whether the moisture content of a plank is high, compare its weight to the limits stated in the Approximate Weight table below. If the plank's weight exceeds these limits, set it aside to dry, and then retest it.

A handheld, electrical-resistance meter with a needle-probe provides an alternative method of determining whether the moisture content of a plank is high. Generally, the recommended procedure is to drive the probe in about one quarter of the plank's thickness to get the average of the section. If the meter has two probes, insert them so they both read along the grain. Take measurements in a few different locations.

The glue lines in LVL affect electrical resistance, making it necessary to adjust the meter reading by a factor of approximately 5/8. This factor is likely to vary, depending on the make and model of the meter. The meter manufacturer will provide other adjustment factors for species and temperature. If the surface of the plank is wet, dirty, or contaminated, or if the plank has been treated with fire retardant, the meter will give false readings. If the meter reading suggests a high moisture content, set the plank aside to dry, and then retest it.

APPROXIMATE WEIGHT OF LVL SCAFFOLD PLANKS (lbs / ft)				
Plank Size	DOUGLAS FIR		SOUTHERN PINE	
	Dry	Wet	Dry	Wet
	Moisture Content ≤ 19%	19% < Moisture Content < 30%	Moisture Content ≤ 19%	19% < Moisture Content < 30%
1 1/2″ x 9 1/4″	3.8	4.6	4.2	4.8
1 1/2″ x 9 1/2″	3.9	4.8	4.4	4.9
1 1/2″ x 11 3/4″	4.8	5.9	5.4	6.1
1 3/4″ x 9″	4.3	5.3	4.8	5.5
1 3/4″ x 9 1/2″	4.5	5.5	5.1	5.8
1 3/4″ x 11 3/4″	5.6	6.9	6.3	7.1
2″ x 12″	6.5	8.0	7.3	8.3
2 1/4″ x 11 3/4″	7.2	8.8	8.1	9.2
2 1/2″ x 11 3/4″	8.0	9.8	9.0	10.2

FRAME & COMPONENT SPECIFICATIONS

WALK-THROUGH FRAMES

SNAP-ON LOCK

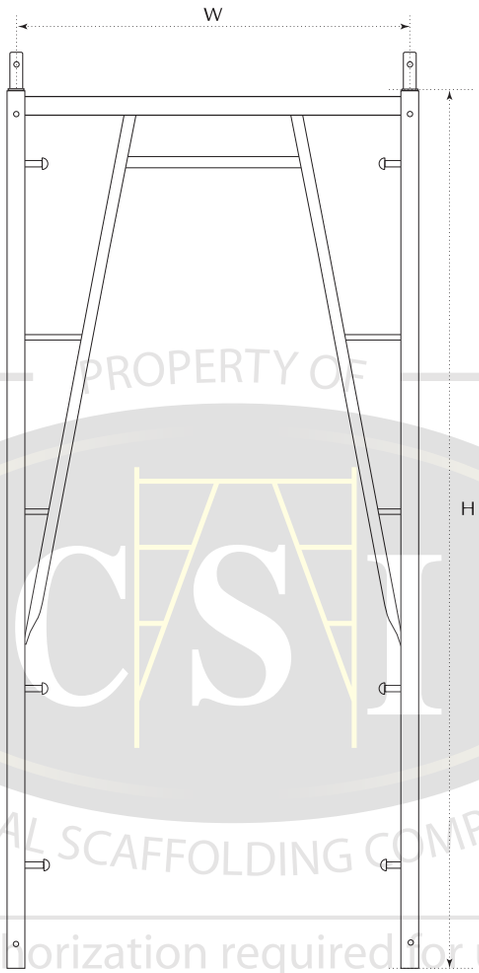

ITEM #	SPECIFICATIONS (W x H)	WEIGHT (lbs)	ALLOWABLE WORKING LOAD (lbs) (multi-tier configuration)
S084	2′ x 5′	23.80	4200
S092	2′ x 6′8″	29.85	3300
S104	3′ x 4′	23.11	4300
S106	3′ x 5′	30.53	4100
S108	3′ x 6′8″	33.85	3200
C1620	42″ x 5′	36.45	4000
C1600	42″ x 6′8″	45.20	3200
C1680	42″ x 8′8″	55.77	2750
S098	5′ x 6′8″	44.10	3100
S128	5′ x 7′6″	54.41	3000

TUBE SIZE FOR LEG:	ø1.625″ x 0.09″
STEEL GRADE FOR LEG:	Q345B
YIELD STRENGTH FOR LEG:	50,000 psi minimum
TENSILE STRENGTH FOR LEG:	68,000 psi minimum
ELONGATION MIN. FOR LEG:	20%
SAFETY FACTOR:	4:1
REFERENCE STANDARD:	ASTM A 1011/A 1011M-05a ANSI/SSFI SC100-5/05

The load data presented is the result of testing conducted in accordance with the Scaffold, Shoring and Forming Institute SC100/05 STANDARDS FOR TESTING AND RATING SCAFFOLD ASSEMBLIES AND COMPONENTS.

FRAME & COMPONENT SPECIFICATIONS

WALK-THROUGH FRAMES – HEAVY DUTY

SNAP-ON / NUTS BOLT

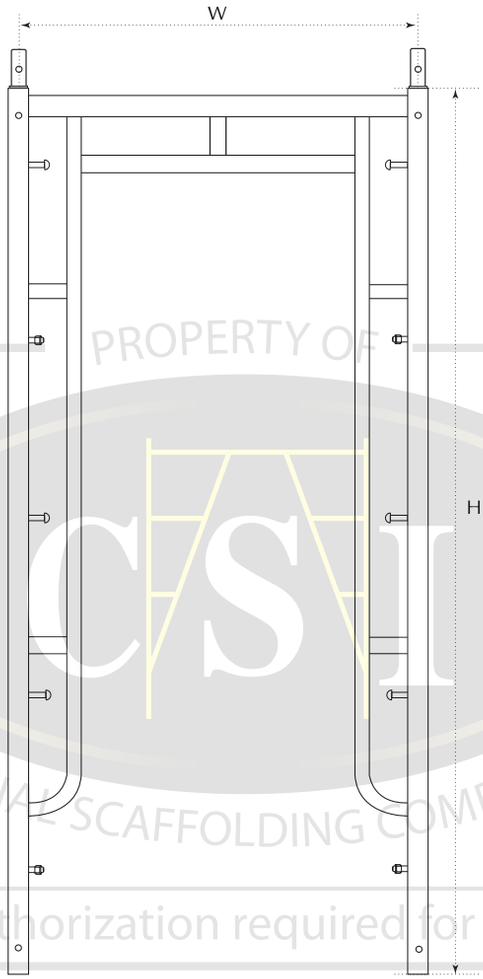

ITEM #	SPECIFICATIONS (W x H)	WEIGHT (lbs)	ALLOWABLE WORKING LOAD (lbs) (multi-tier configuration)
S106 (HD)	3′ x 5′	47.62	6830
S108 (HD)	3′ x 6′8″	59.85	6830
S109 (HD)	3′ x 7′8	72.60	6800
S110 (HD)	3′ x 8′8″	79.25	6700
S102 (HD)	3′ x 40″	29.82	7250

TUBE SIZE FOR LEG:	ø1.77″ x 0.165″
STEEL GRADE FOR LEG:	Q345B
YIELD STRENGTH FOR LEG:	50,000 psi minimum
TENSILE STRENGTH FOR LEG:	68,000 psi minimum
ELONGATION MIN. FOR LEG:	20%
SAFETY FACTOR:	4:1
REFERENCE STANDARD:	ASTM A 1011/A 1011M-05a ANSI/SSFI SC100-5/05

The load data presented is the result of testing conducted in accordance with the Scaffold, Shoring and Forming Institute SC100/05 STANDARDS FOR TESTING AND RATING SCAFFOLD ASSEMBLIES AND COMPONENTS.

FRAME & COMPONENT SPECIFICATIONS

WALK-THROUGH STARTER FRAMES

SNAP-ON LOCK

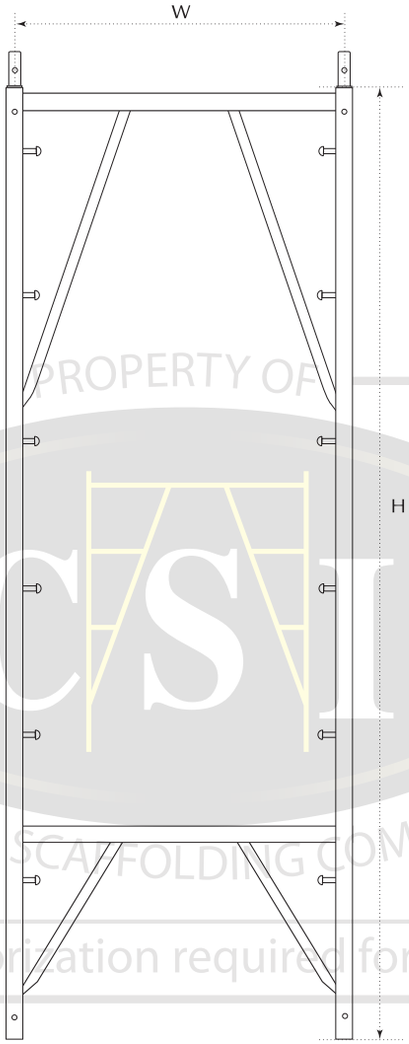

ITEM #	SPECIFICATIONS (W x H)	WEIGHT (lbs)	ALLOWABLE WORKING LOAD (lbs) (multi-tier configuration)
S092.5	2′ x 7′8″	41.54	3000
S091	2′ x 8′8″	41.96	2800
S093	2′ x 10′8″	51.30	1900
S109	3′ x 7′8″	44.91	2950
S110	3′ x 8′8″	46.61	2750
S112	3′ x 10′8″	55.11	1900

TUBE SIZE FOR LEG:	ø1.625″ x 0.09″
STEEL GRADE FOR LEG:	Q345B
YIELD STRENGTH FOR LEG:	50,000 psi minimum
TENSILE STRENGTH FOR LEG:	68,000 psi minimum
ELONGATION MIN. FOR LEG:	20%
SAFETY FACTOR:	4:1
REFERENCE STANDARD:	ASTM A 1011/A 1011M-05a ANSI/SSFI SC100-5/05

The load data presented is the result of testing conducted in accordance with the Scaffold, Shoring and Forming Institute SC100/05 STANDARDS FOR TESTING AND RATING SCAFFOLD ASSEMBLIES AND COMPONENTS.

FRAME & COMPONENT SPECIFICATIONS

SINGLE BOX STARTER FRAMES

SNAP-ON LOCK

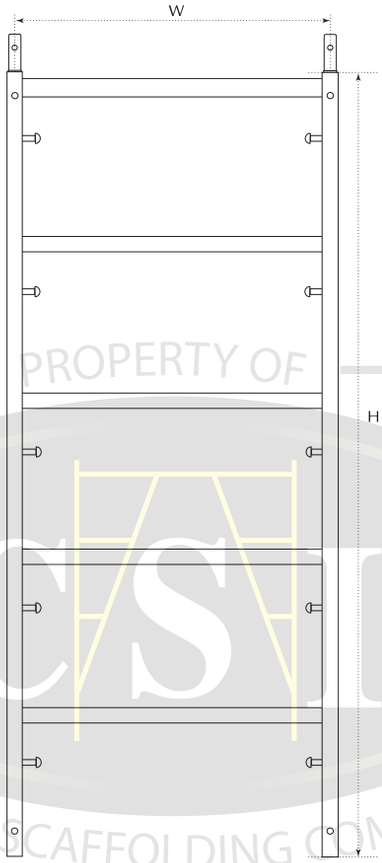

ITEM #	SPECIFICATIONS (W x H)	WEIGHT (lbs)	ALLOWABLE WORKING LOAD (lbs) (multi-tier configuration)
S088	2′ x 20″	13.08	5600
S090	2′ x 40″	18.35	5000
S134	2′ x 5′	25.48	4600
S131	2′ x 6′8″	32.78	3400
S100	3′ x 20″	16.23	5500
S102	3′ x 40″	21.54	5000
S105	3′ x 4′	23.22	4700
S106	3′ x 5′	29.43	4500
S133	3′ x 6′8″	37.22	3300
C1660	42″ x 20″	17.53	5500
C1640	42″ x 40″	22.71	4900
S094	5′ x 20″	22.73	5000
S096	5′ x 40″	27.80	4500

TUBE SIZE FOR LEG:	ø1.625″ x 0.09″
STEEL GRADE FOR LEG:	Q345B
YIELD STRENGTH FOR LEG:	50,000 psi minimum
TENSILE STRENGTH FOR LEG:	68,000 psi minimum
ELONGATION MIN. FOR LEG:	20%
SAFETY FACTOR:	4:1
REFERENCE STANDARD:	ASTM A 1011/A 1011M-05a ANSI/SSFI SC100-5/05

The load data presented is the result of testing conducted in accordance with the Scaffold, Shoring and Forming Institute SC100/05 STANDARDS FOR TESTING AND RATING SCAFFOLD ASSEMBLIES AND COMPONENTS.

FRAME & COMPONENT SPECIFICATIONS

MASON FRAMES

SNAP-ON LOCK

ITEM #	SPECIFICATIONS (W x H)	WEIGHT (lbs)	ALLOWABLE WORKING LOAD (lbs) (multi-tier configuration)
S120	5′ x 4′	32.51	4500
S118	5′ x 5′	39.93	4200
S119	5′ x 6′8″	48.55	3200

TUBE SIZE FOR LEG:	ø1.625″ x 0.09″
STEEL GRADE FOR LEG:	Q345B
YIELD STRENGTH FOR LEG:	50,000 psi minimum
TENSILE STRENGTH FOR LEG:	68,000 psi minimum
ELONGATION MIN. FOR LEG:	20%
SAFETY FACTOR:	4:1
REFERENCE STANDARD:	ASTM A 1011/A 1011M-05a ANSI/SSFI SC100-5/05

The load data presented is the result of testing conducted in accordance with the Scaffold, Shoring and Forming Institute SC100/05 STANDARDS FOR TESTING AND RATING SCAFFOLD ASSEMBLIES AND COMPONENTS.

FRAME & COMPONENT SPECIFICATIONS

DOUBLE BOX FRAMES

SNAP-ON LOCK

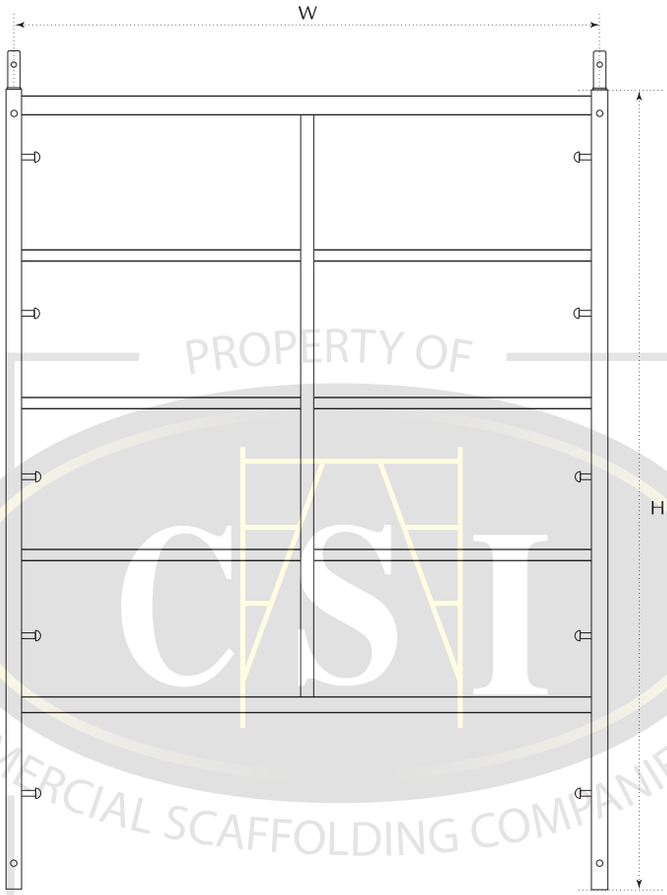

ITEM #	SPECIFICATIONS (W x H)	WEIGHT (lbs)	ALLOWABLE WORKING LOAD (lbs) (multi-tier configuration)
S121	5′ x 4′	33.41	4600
S124	5′ x 5′	43.70	4300
S122	5′ x 6′8″	54.21	3300

TUBE SIZE FOR LEG:	ø1.625″ x 0.09″
STEEL GRADE FOR LEG:	Q345B
YIELD STRENGTH FOR LEG:	50,000 psi minimum
TENSILE STRENGTH FOR LEG:	68,000 psi minimum
ELONGATION MIN. FOR LEG:	20%
SAFETY FACTOR:	4:1
REFERENCE STANDARD:	ASTM A 1011/A 1011M-05a ANSI/SSFI SC100-5/05

The load data presented is the result of testing conducted in accordance with the Scaffold, Shoring and Forming Institute SC100/05 STANDARDS FOR TESTING AND RATING SCAFFOLD ASSEMBLIES AND COMPONENTS.

FRAME & COMPONENT SPECIFICATIONS

WALK THROUGH FRAMES

DROP LOCK

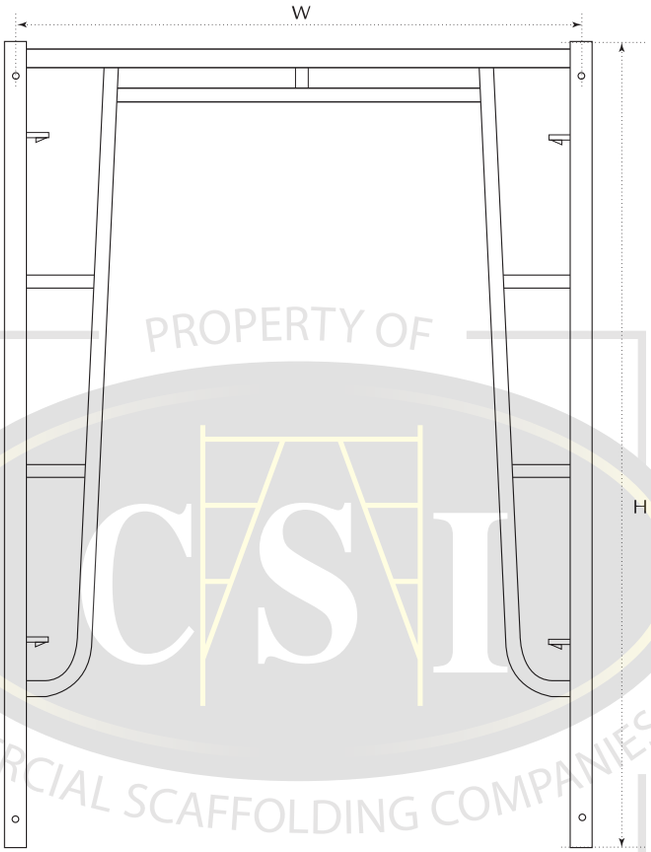

ITEM #	SPECIFICATIONS (W x H)	WEIGHT (lbs)	ALLOWABLE WORKING LOAD (lbs) (multi-tier configuration)
TF5H-5W-L3	5′ x 5′	38.68	4600
TF6H-5W-L3	5′ x 6′4″	44.63	3700

TUBE SIZE FOR LEG:	ø1.69″ x 0.095″
STEEL GRADE FOR LEG:	Q345B
YIELD STRENGTH FOR LEG:	50,000 psi minimum
TENSILE STRENGTH FOR LEG:	68,000 psi minimum
ELONGATION MIN. FOR LEG:	20%
SAFETY FACTOR:	4:1
REFERENCE STANDARD:	ASTM A 1011/A 1011M-05a ANSI/SSFI SC100-5/05

The load data presented is the result of testing conducted in accordance with the Scaffold, Shoring and Forming Institute SC100/05 STANDARDS FOR TESTING AND RATING SCAFFOLD ASSEMBLIES AND COMPONENTS.

FRAME & COMPONENT SPECIFICATIONS

MASON FRAMES

DROP LOCK

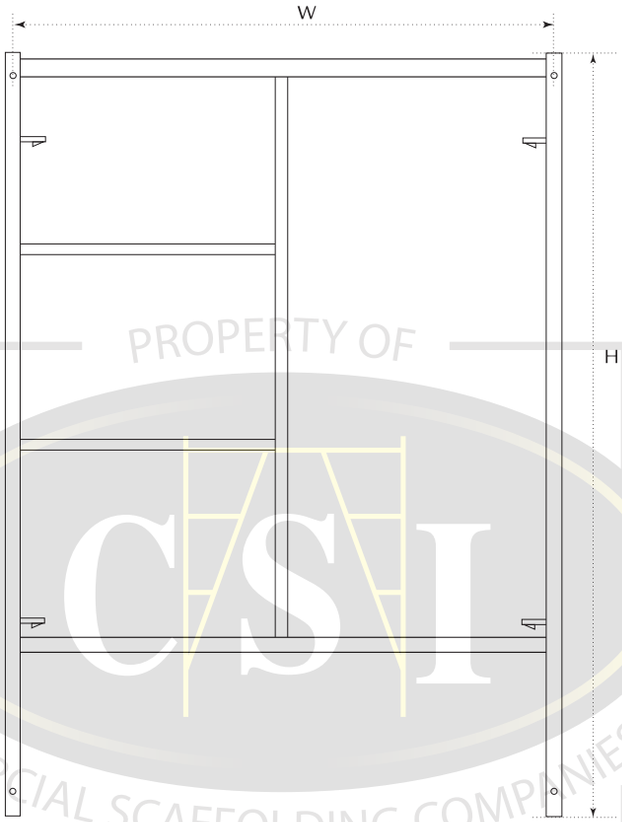

ITEM #	SPECIFICATIONS (W x H)	WEIGHT (lbs)	ALLOWABLE WORKING LOAD (lbs) (multi-tier configuration)
MF4H-5W-L3	5′ x 4′	31.61	4700
MF5H-5W-L3	5′ x 5′	35.31	4500
MF6H-5W-L3	5′ x 6′4″	42.69	3300

TUBE SIZE FOR LEG:	ø1.69″ x 0.095″
STEEL GRADE FOR LEG:	Q345B
YIELD STRENGTH FOR LEG:	50,000 psi minimum
TENSILE STRENGTH FOR LEG:	68,000 psi minimum
ELONGATION MIN. FOR LEG:	20%
SAFETY FACTOR:	4:1
REFERENCE STANDARD:	ASTM A 1011/A 1011M-05a ANSI/SSFI SC100-5/05

The load data presented is the result of testing conducted in accordance with the Scaffold, Shoring and Forming Institute SC100/05 STANDARDS FOR TESTING AND RATING SCAFFOLD ASSEMBLIES AND COMPONENTS.

10″ WIDE STEEL PLANK

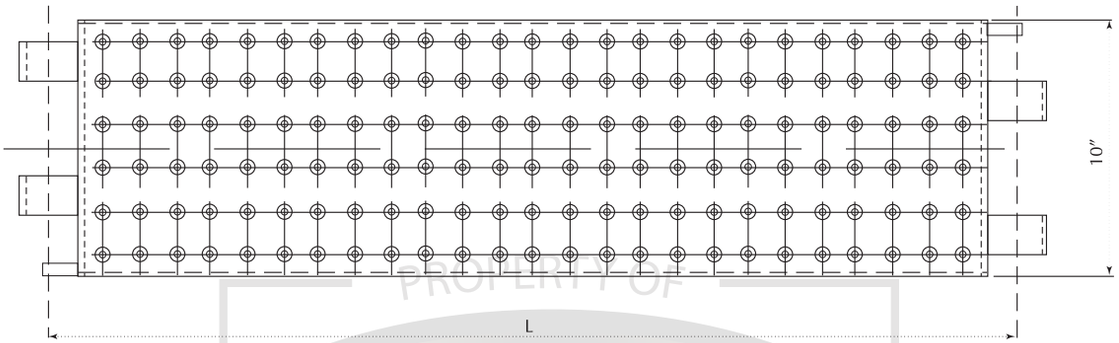

Reference Standards (Factored):
8′ plank and under have 75 lbs/ft² working load
Above 8′ planks have 50 lbs/ft² working load

ITEM #	SPECIFICATIONS (L)	WEIGHT (lbs)	ACTUAL UNIFORM TEST LOAD – FACTORED (lbs/ft²)
S727SD	3′	18.02	615
S726SD	5′	26.98	290
S725SD	7′	35.95	140
S724SD	10′	49.14	70

STEEL GRADE:	Q235B
YIELD STRENGTH:	34,000 psi minimum
TENSILE STRENGTH:	54,000 psi minimum
ELONGATION MINIMUM:	26%
SAFETY FACTOR:	4:1
REFERENCE STANDARD:	ASTM A 1011/A 1011M-05a ANSI/SSFI SC100-5/05, OSHA

The load data presented is the result of testing conducted in accordance with the Scaffold, Shoring and Forming Institute SC100/05 STANDARDS FOR TESTING AND RATING SCAFFOLD ASSEMBLIES AND COMPONENTS.

Updated: 8/10/2018

9″ WIDE STEEL PLANK

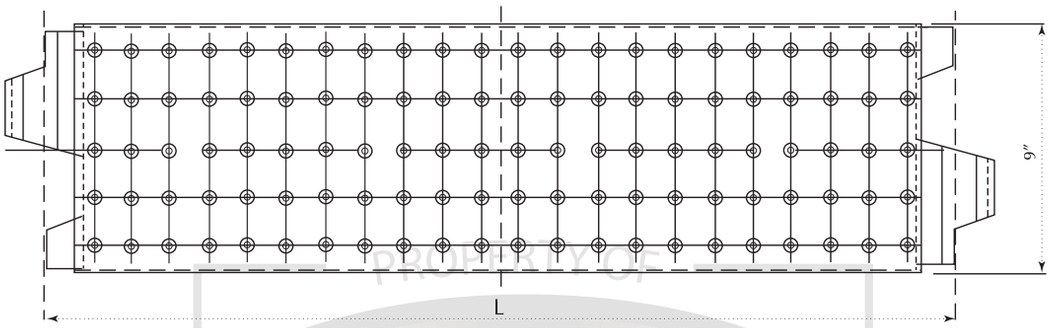

Reference Standards (Factored):
8′ plank and under have 75 lbs/ft² working load
Above 8′ planks have 50 lbs/ft² working load

ITEM #	SPECIFICATIONS (L)	WEIGHT (lbs)	ACTUAL UNIFORM TEST LOAD – FACTORED (lbs/ft²)
PSW-3	3′	16.43	620
PSW-4	4′	20.70	425
PSW-5	5′	24.85	295
PSW-6	6′	29.07	205
PSW-7	7′	33.26	145
PSW-8	8′	37.44	115
PSW-10	10′	45.81	70

STEEL GRADE:	Q235B
YIELD STRENGTH:	34,000 psi minimum
TENSILE STRENGTH:	54,000 psi minimum
ELONGATION MINIMUM:	26%
SAFETY FACTOR:	4:1
REFERENCE STANDARD:	ASTM A 1011/A 1011M-05a ANSI/SSFI SC100-5/05, OSHA

The load data presented is the result of testing conducted in accordance with the Scaffold, Shoring and Forming Institute SC100/05 STANDARDS FOR TESTING AND RATING SCAFFOLD ASSEMBLIES AND COMPONENTS.

FRAME & COMPONENT SPECIFICATIONS

ALUMINUM PLYWOOD HATCH PLANK with ALUMINUM LADDER

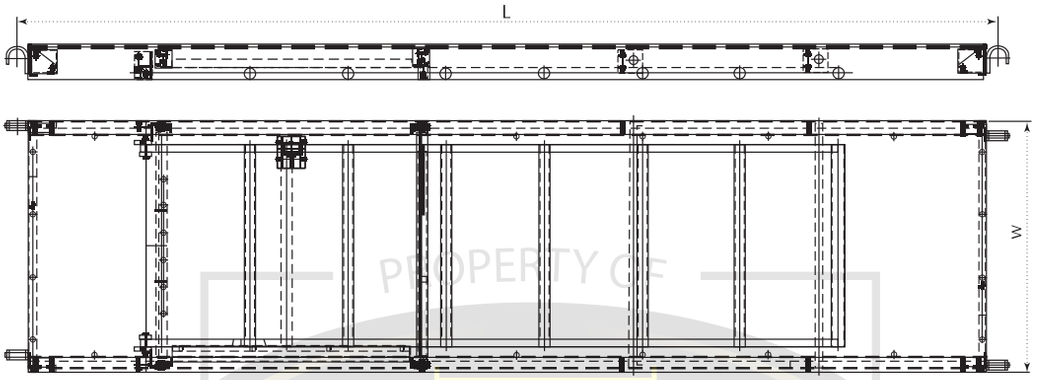

ITEM #	SPECIFICATIONS (W x L)	WEIGHT (lbs)	UNIFORM LOAD (lbs/ft²)
723.5	28″ x 7′	72.69	50
722.5	28″ x 10′	90.75	50

MATERIAL:	6061-T6
YIELD STRENGTH:	34,800 psi minimum
TENSILE STRENGTH:	37,700 psi minimum
ELONGATION MINIMUM:	7%
SAFETY FACTOR:	4:1
REFERENCE STANDARD:	OSHA

The load data presented is the result of testing conducted in accordance with the Scaffold, Shoring and Forming Institute SC100/05 STANDARDS FOR TESTING AND RATING SCAFFOLD ASSEMBLIES AND COMPONENTS.

PUNCH-HOLE GUARD RAIL

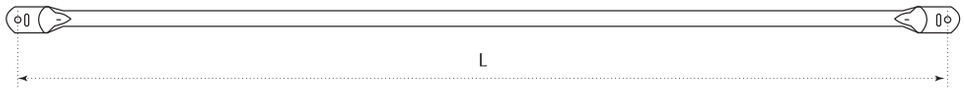

ITEM #	SPECIFICATIONS (L)	WEIGHT (lbs)	SAFETY LOAD (lbs)
GR1	1′	0.84	320
GR2	2′	1.54	300
GR27	27.625″	1.76	295
GR3	3′	2.27	280
GR42	42″	2.64	275
GR5	5′	3.72	260
GR6	6′	4.43	250
GR7	7′	5.15	240
GR8	8′	7.47	220
GR9	9′	8.37	210
GR10	10′	9.30	200

STEEL GRADE:	Q235
YIELD STRENGTH:	34,000 psi minimum
TENSILE STRENGTH:	54,000 psi minimum
ELONGATION MINIMUM:	26%
SAFETY FACTOR:	4:1
REFERENCE STANDARD:	ASTM A 1011/A 1011M-05a ANSI/SSFI SC100-5/05

The load data presented is the result of testing conducted in accordance with the Scaffold, Shoring and Forming Institute SC100/05 STANDARDS FOR TESTING AND RATING SCAFFOLD ASSEMBLIES AND COMPONENTS.

PUNCH-HOLE CROSS BRACES

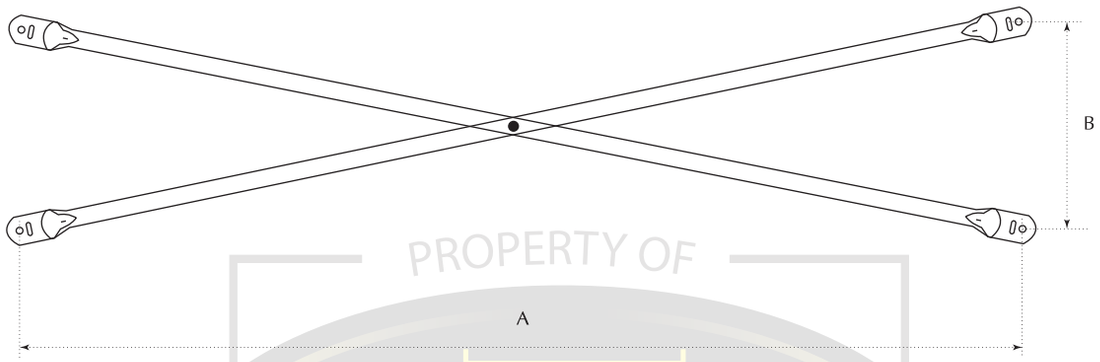

ITEM #	SPECIFICATIONS (A x B)	WEIGHT (lbs)
B44	4′ x 4′	8.52
B54	5′ x 4′	9.60
B64	6′ x 4′	10.77
B74	7′ x 4′	12.00
B84	8′ x 4′	13.26
B94	9′ x 4′	14.58
B104	10′ x 4′	15.90

TUBE SIZE:	ø1″ x 0.073″
STEEL GRADE:	Q235
YIELD STRENGTH:	34,000 psi minimum
TENSILE STRENGTH:	54,000 psi minimum
ELONGATION MINIMUM:	26%
SAFETY FACTOR:	4:1
REFERENCE STANDARD:	ASTM A 1011/A 1011M-05a

The load data presented is the result of testing conducted in accordance with the Scaffold, Shoring and Forming Institute SC100/05 STANDARDS FOR TESTING AND RATING SCAFFOLD ASSEMBLIES AND COMPONENTS.

Updated: 8/10/2018

SNAP-ON GUARD RAIL

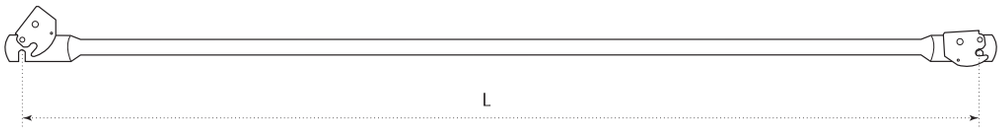

ITEM #	SPECIFICATIONS (L)	WEIGHT (lbs)	SAFETY LOAD (lbs)
S176	2′	3.00	300
S150	3′	4.00	280
S154	5′	6.00	260
S160	7′	8.00	240
S166	10′	11.50	200
S180	42″	4.50	270
S178	48″	5.00	270

STEEL GRADE:	Q235
YIELD STRENGTH:	34,000 psi minimum
TENSILE STRENGTH:	54,000 psi minimum
ELONGATION MINIMUM:	26%
SAFETY FACTOR:	4:1
REFERENCE STANDARD:	ASTM A 1011/A 1011M-05a ANSI/SSFI SC100-5/05

The load data presented is the result of testing conducted in accordance with the Scaffold, Shoring and Forming Institute SC100/05 STANDARDS FOR TESTING AND RATING SCAFFOLD ASSEMBLIES AND COMPONENTS.

SNAP-ON CROSS BRACES

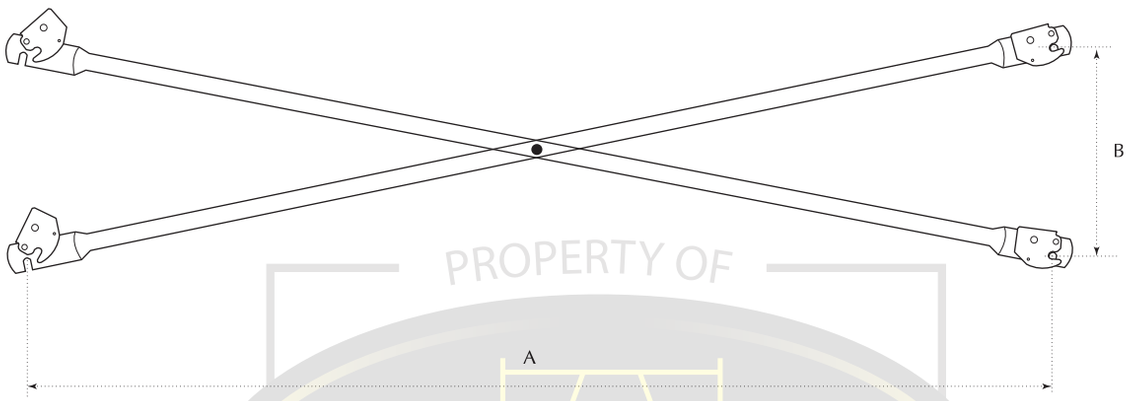

ITEM #	SPECIFICATIONS (A x B)	WEIGHT (lbs)
S159	5′ x 32″	10.60
S158	5′ x 48″	11.70
S165	7′ x 32″	13.45
S164	7′ x 48″	14.35
S171	10′ x 32″	17.90
S170	10′ x 48″	18.60
S153	5′ x 12″	9.70
S155	7′ x 12″	12.90
S157	10′ x 12″	16.80
S170.5	10′ x 24″	16.35

TUBE SIZE:	ø1″ x 0.073″
STEEL GRADE:	Q235
YIELD STRENGTH:	34,000 psi minimum
TENSILE STRENGTH:	54,000 psi minimum
ELONGATION MINIMUM:	26%
SAFETY FACTOR:	4:1
REFERENCE STANDARD:	ASTM A 1011/A 1011M-05a

The load data presented is the result of testing conducted in accordance with the Scaffold, Shoring and Forming Institute SC100/05 STANDARDS FOR TESTING AND RATING SCAFFOLD ASSEMBLIES AND COMPONENTS.

GOOSER

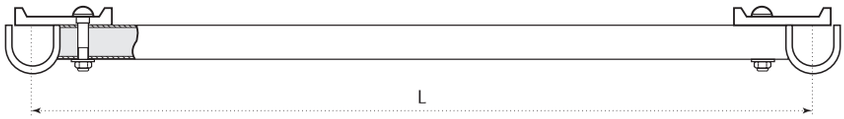

ITEM #	SPECIFICATIONS (L)	WEIGHT (lbs)
S177	2′	4.00
S152	3′	6.00
S152.5	4′	7.00
S156	5′	8.10
S156.5	6′	9.30
S162	7′	10.20
S166	9′	12.50
S168	10′	13.35
S168HD	10′	19.00
S169	11′	14.30
S175	12′	15.20

SCREW JACK with BASE PLATE

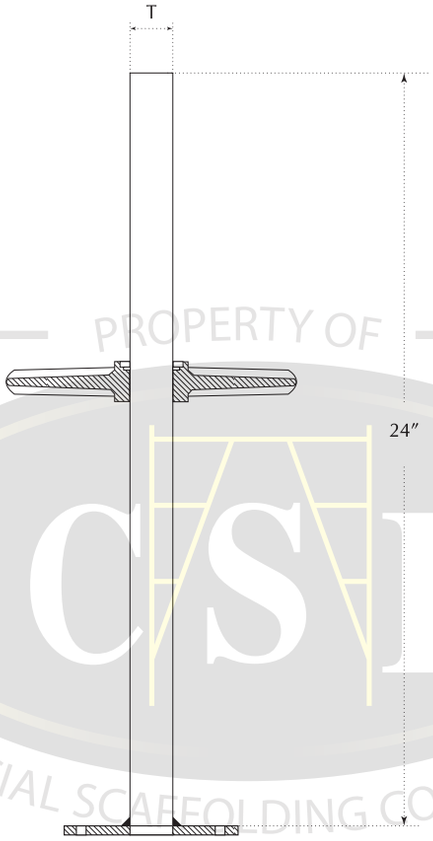

ITEM #	THREAD DIAMETER (T)	ROD / TUBE	WEIGHT (lbs)	SAFETY LOAD (lbs)
S352 (1.25″)	T31.75 x 6 T1.25″ x 0.236″	solid	10.81	11,000
S352	T34 x 6 T1.339″ x 0.236″	solid	11.72	12,000

STEEL GRADE FOR LEG:	Q235
YIELD STRENGTH FOR LEG:	34,000 psi minimum
TENSILE STRENGTH FOR LEG:	54,000 psi minimum
ELONGATION MIN. FOR LEG:	26%
SAFETY FACTOR:	4:1
REFERENCE STANDARD:	ASTM A 1011/A 1011M-05a ANSI/SSFI SC100-5/05

The load data presented is the result of testing conducted in accordance with the Scaffold, Shoring and Forming Institute SC100/05 STANDARDS FOR TESTING AND RATING SCAFFOLD ASSEMBLIES AND COMPONENTS.

SWIVEL SCREW JACK with BASE PLATE

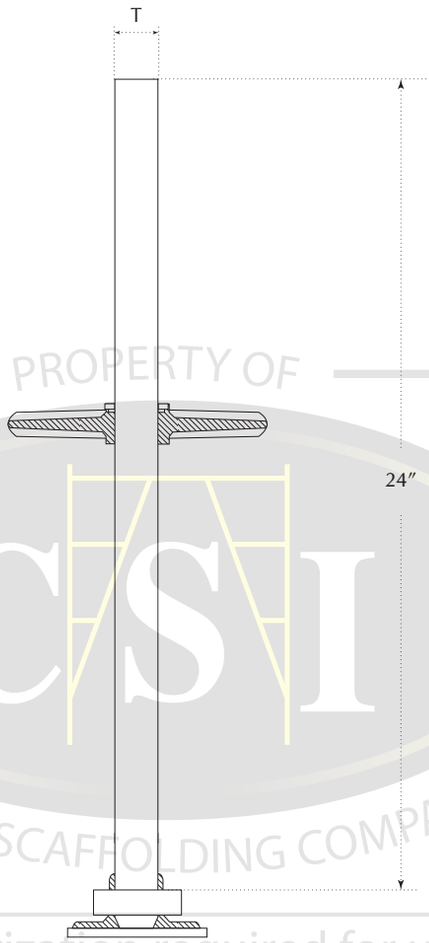

ITEM #	THREAD DIAMETER (T)	ROD / TUBE	WEIGHT (lbs)	SAFETY LOAD (lbs)
S356 (1.25″)	T31.75 x 6 T1.25″ x 0.236″	solid	12.05	11,000
S356	T34 x 6 T1.339″ x 0.236″	solid	11.87	12,000

STEEL GRADE FOR LEG:	Q235
YIELD STRENGTH FOR LEG:	34,000 psi minimum
TENSILE STRENGTH FOR LEG:	54,000 psi minimum
ELONGATION MIN. FOR LEG:	26%
SAFETY FACTOR:	4:1
REFERENCE STANDARD:	ASTM A 1011/A 1011M-05a ANSI/SSFI SC100-5/05

The load data presented is the result of testing conducted in accordance with the Scaffold, Shoring and Forming Institute SC100/05 STANDARDS FOR TESTING AND RATING SCAFFOLD ASSEMBLIES AND COMPONENTS.

SCREW JACK with SOCKET

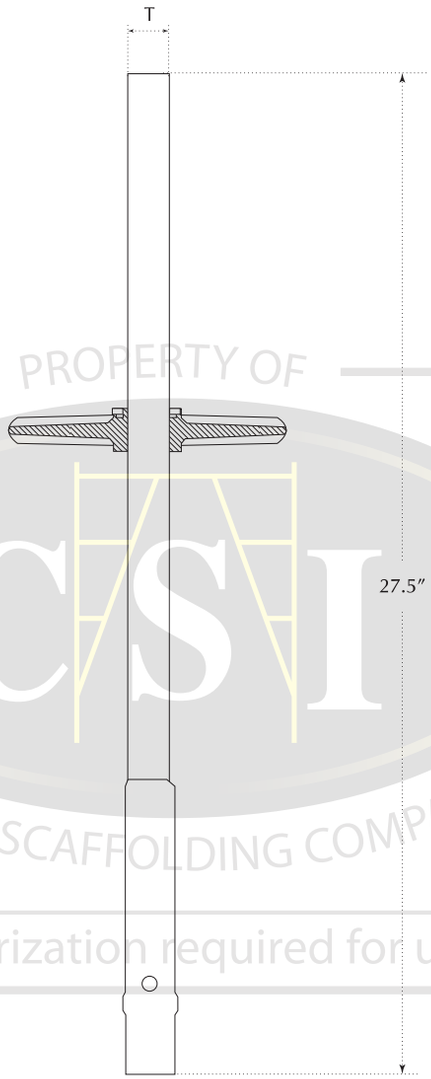

ITEM #	THREAD DIAMETER (T)	ROD / TUBE	WEIGHT (lbs)	SAFETY LOAD (lbs)
S354 (1.25″)	T31.75 x 6 T1.25″ x 0.236″	solid	5.95	11,000
S354	T34 x 6 T1.339″ x 0.236″	solid	10.57	12,000
S354-H	T34 x 6 T1.339″ x 0.236″	hollow	6.85	8,000

STEEL GRADE FOR LEG:	Q235
YIELD STRENGTH FOR LEG:	34,000 psi minimum
TENSILE STRENGTH FOR LEG:	54,000 psi minimum
ELONGATION MIN. FOR LEG:	26%
SAFETY FACTOR:	4:1
REFERENCE STANDARD:	ASTM A 1011/A 1011M-05a ANSI/SSFI SC100-5/05

The load data presented is the result of testing conducted in accordance with the Scaffold, Shoring and Forming Institute SC100/05 STANDARDS FOR TESTING AND RATING SCAFFOLD ASSEMBLIES AND COMPONENTS.

Updated: 8/10/2018

EXTENSION BASE PLATE

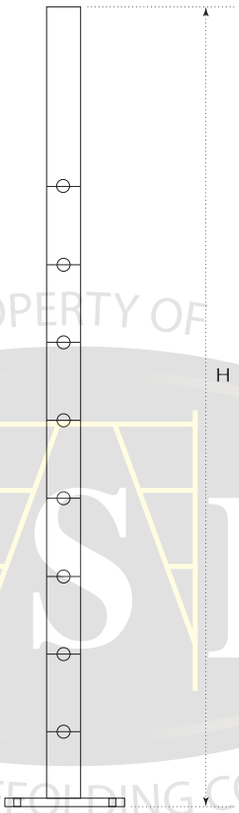

ITEM #	SPECIFICATIONS (H)	WEIGHT (lbs)	SAFETY LOAD (lbs)
S353	12″ 4-hole	3.00	1300
S350	24″ 8-hole	3.94	1200

TUBE SIZE FOR LEG:	ø1.319″ x 0.073″
STEEL GRADE FOR LEG:	Q235
YIELD STRENGTH FOR LEG:	34,000 psi minimum
TENSILE STRENGTH FOR LEG:	54,000 psi minimum
ELONGATION MIN. FOR LEG:	26%
SAFETY FACTOR:	4:1
REFERENCE STANDARD:	ASTM A 1011/A 1011M-05a ANSI/SSFI SC100-5/05

The load data presented is the result of testing conducted in accordance with the Scaffold, Shoring and Forming Institute SC100/05 STANDARDS FOR TESTING AND RATING SCAFFOLD ASSEMBLIES AND COMPONENTS.

44″ SNAP-ON GUARD RAIL POST

S250

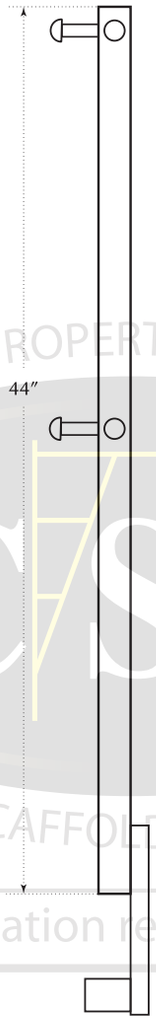

WEIGHT:	9 lbs
MATERIAL:	Q235
YIELD STRENGTH:	63,000 psi minimum
TENSILE STRENGTH:	50,000 psi minimum
ELONGATION MINIMUM:	26%

The load data presented is the result of testing conducted in accordance with the Scaffold, Shoring and Forming Institute SC100/05 STANDARDS FOR TESTING AND RATING SCAFFOLD ASSEMBLIES AND COMPONENTS.

ANGLE IRON SIDE BRACKET

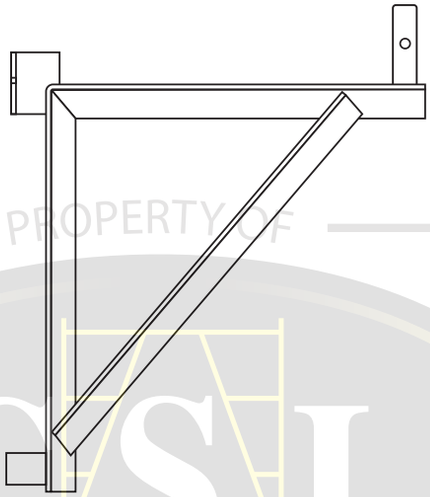

ITEM #	SPECIFICATIONS	WEIGHT (lbs)	UNIFORM LOAD (lbs)
S300	12″	6.94	1380
S303	20″	10.75	1200
S304	24″	12.49	1100

STEEL GRADE:	Q235
YIELD STRENGTH:	34,000 psi minimum
TENSILE STRENGTH:	54,000 psi minimum
ELONGATION MINIMUM:	26%
SAFETY FACTOR:	4:1
REFERENCE STANDARD:	ASTM A 1011/A 1011M-05a ANSI/SSFI SC100-5/05

The load data presented is the result of testing conducted in accordance with the Scaffold, Shoring and Forming Institute SC100/05 STANDARDS FOR TESTING AND RATING SCAFFOLD ASSEMBLIES AND COMPONENTS.

TRUSS

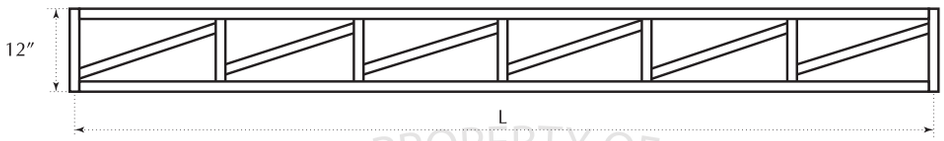

ITEM #	SPECIFICATIONS (12″ x L)	WEIGHT (lbs)	UNIFORM LOAD (lbs/ft)
P8-12	12″ x 8′	35.64	400
P10-12	12″ x 10′	44.14	360
P12-12	12″ x 12′	52.67	320
P16-12	12″ x 16′	69.69	270
P18-12	12″ x 18′	78.13	250
P20-12	12″ x 20′	86.96	220
P22-12	12″ x 22′	95.18	170
P24-12	12″ x 24′	103.70	130

TUBE SIZE:	ø41.3 x 2.3 (ø1.625″ x 0.09″)
STEEL GRADE:	Q345B
YIELD STRENGTH:	50,000 psi minimum
TENSILE STRENGTH:	68,000 psi minimum
ELONGATION MINIMUM:	20%
SAFETY FACTOR:	4:1
REFERENCE STANDARD:	ASTM A 1011/A 1011M-05a ANSI/SSFI SC100-5/05

The load data presented is the result of testing conducted in accordance with the Scaffold, Shoring and Forming Institute SC100/05 STANDARDS FOR TESTING AND RATING SCAFFOLD ASSEMBLIES AND COMPONENTS.

Updated: 8/10/2018

TRUSS

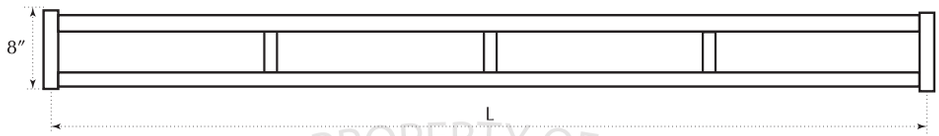

ITEM #	SPECIFICATIONS (8″ x L)	WEIGHT (lbs)	UNIFORM LOAD (lbs/ft)
P6-8	8″ x 6′	20.66	400
P8-8	8″ x 8′	27.20	360
P10-8	8″ x 10′	33.70	320
P12-8	8″ x 12′	40.22	270
P16-8	8″ x 16′	53.26	230

TUBE SIZE:	ø41.3 x 2.3 (ø1.625″ x 0.09″)
STEEL GRADE:	Q345B
YIELD STRENGTH:	50,000 psi minimum
TENSILE STREGTH:	68,000 psi minimum
ELONGATION MINIMUM:	20%
SAFETY FACTOR:	4:1
REFERENCE STANDARD:	ASTM A 1011/A 1011M-05a ANSI/SSFI SC100-5/05

The load data presented is the result of testing conducted in accordance with the Scaffold, Shoring and Forming Institute SC100/05 STANDARDS FOR TESTING AND RATING SCAFFOLD ASSEMBLIES AND COMPONENTS.

TRUSS

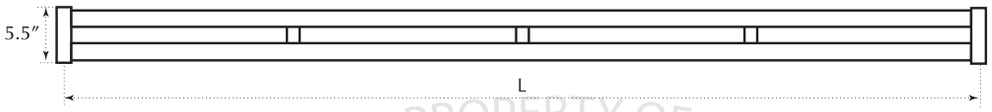

ITEM #	SPECIFICATIONS (5.5″ x L)	WEIGHT (lbs)	UNIFORM LOAD (lbs/ft)
P8	5.5″ x 8′	24.01	420
P10	5.5″ x 10′	32.64	390
P12	5.5″ x 12′	41.28	350

TUBE SIZE:	ø41.3 x 2.41 (ø1.69″ x 0.095″)
STEEL GRADE:	Q345B
YIELD STRENGTH:	50,000 psi minimum
TENSILE STRENGTH:	68,000 psi minimum
ELONGATION MINIMUM:	20%
SAFETY FACTOR:	4:1
REFERENCE STANDARD:	ASTM A 1011/A 1011M-05a ANSI/SSFI SC100-5/05

The load data presented is the result of testing conducted in accordance with the Scaffold, Shoring and Forming Institute SC100/05 STANDARDS FOR TESTING AND RATING SCAFFOLD ASSEMBLIES AND COMPONENTS.

Updated: 8/10/2018

STAIRWAY UNIT

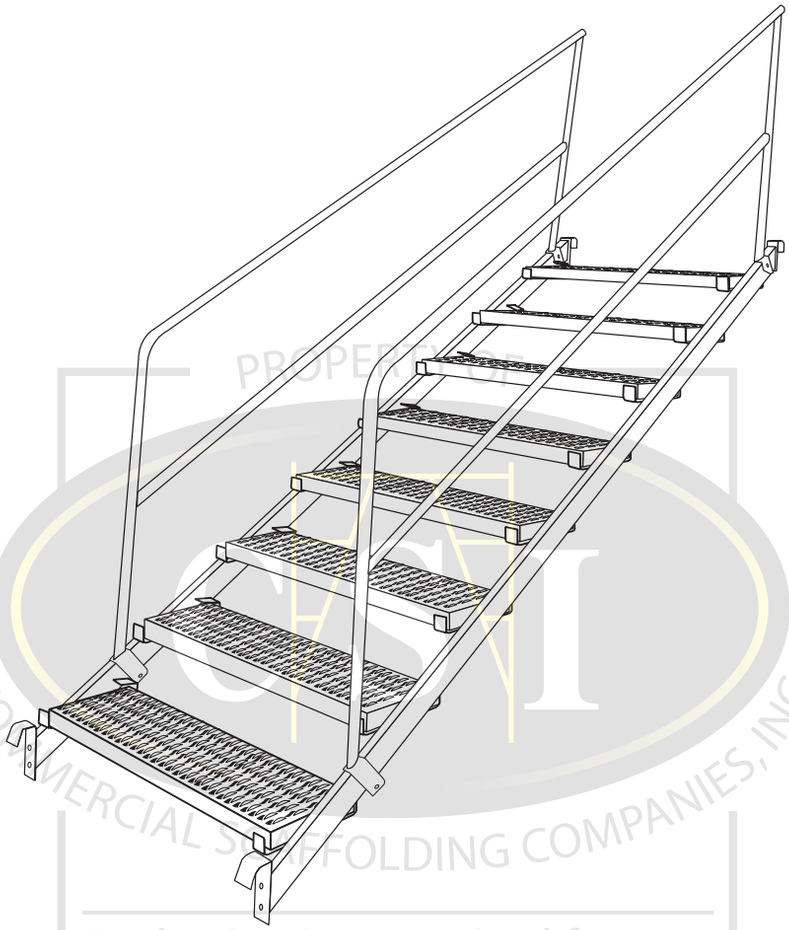

ITEM #	SPECIFICATIONS	WEIGHT (lbs)	SAFETY LOAD (lbs)
ST761	7′ x 61″	116.30	450
ST7	7′ x 76″	116.06	430
ST779	7′ x 79″	123.61	420
ST780	7′ x 80″	124.05	420
ST861	8′ x 61″	120.93	450
ST8	8′ x 76″	121.52	430

TUBE SIZE:	ø43 x 2.41 (ø1.69″ x 0.095″)
STEEL GRADE:	Q345B
YIELD STRENGTH:	50,000 psi minimum
TENSILE STRENGTH:	68,000 psi minimum
ELONGATION MINIMUM:	20%
SAFETY FACTOR:	4:1
REFERENCE STANDARD:	ASTM A 1011/A 1011M-05a ANSI/SSFI SC100-5/05

The load data presented is the result of testing conducted in accordance with the Scaffold, Shoring and Forming Institute SC100/05 STANDARDS FOR TESTING AND RATING SCAFFOLD ASSEMBLIES AND COMPONENTS.

TOE BOARD SADDLE BRACKET

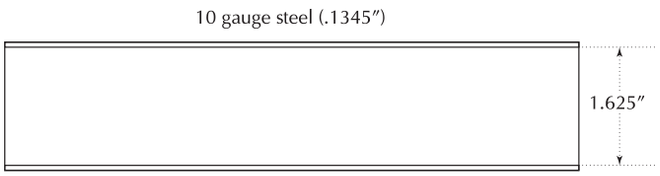

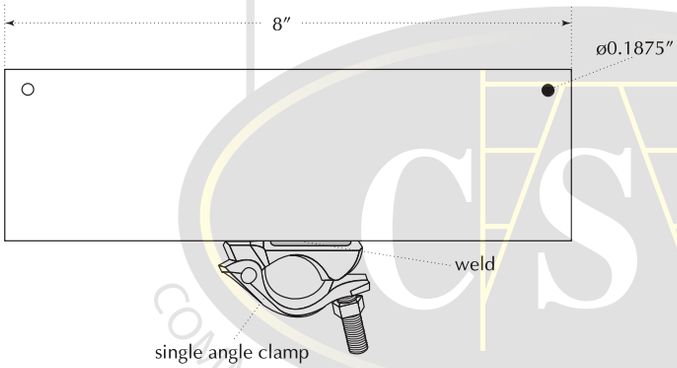

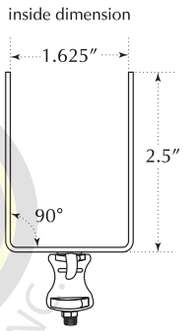

MATERIAL:	.1345″ sheet metal hinge clamp (galvanized)
FINISH:	yellow powder coat

Updated: 8/10/2018

CLAMP – R: RIGHT ANGLE COUPLER

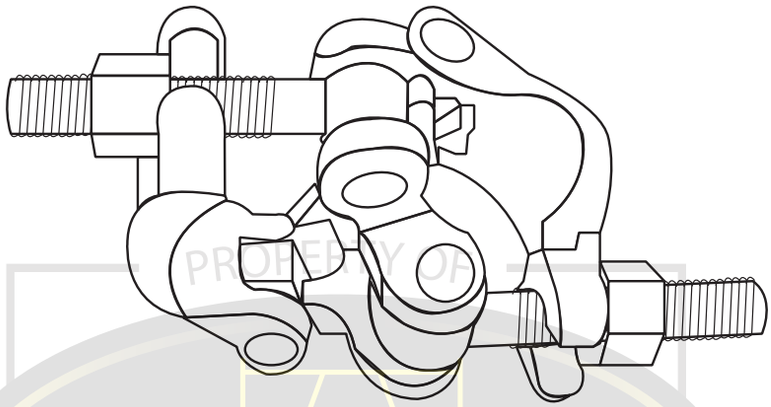

Hexagonal head of clamp bolts are tightened to 38 ft. lbs. prior to loading for all tests.

CHEMICAL ANALYSIS						
			Q255, GRADE A		AISI 1020	
ELEMENT		RESULT %	MIN %	MAX %	MIN %	MAX %
C	=	0.18	0.14	0.22	0.18	0.23
Mn	=	0.44	0.30	0.65	0.30	0.60
P	=	0.010	0.000	0.045	0.000	0.040
S	=	0.018	0.000	0.050	0.000	0.050

* The material from Clamp-R meets Chinese steel Q255, Grade A. It also meets comparable US steel AISI 1020.

LOAD TEST			
Test Method: EN74 | Quantity: 2			
	SLIP LOAD *	ULTIMATE LOAD *	
Coupler #	Slip Load (measured after 0.275" travel)	Ultimate Load	Failure Mode
1	8,565 lbs	14,580 lbs	deformation of pivot pin
2	5,124 lbs	15,150 lbs	deformation of pivot pin
Average	6,845 lbs	14,865 lbs	

*With a 4:1 safety factor:

- the average slip load value is 1,711 lbs
- the average ultimate load value is 3,716 lbs

The load data presented is the result of testing conducted in accordance with the Scaffold, Shoring and Forming Institute SC100/05 STANDARDS FOR TESTING AND RATING SCAFFOLD ASSEMBLIES AND COMPONENTS.

CLAMP – S: SWIVEL COUPLER

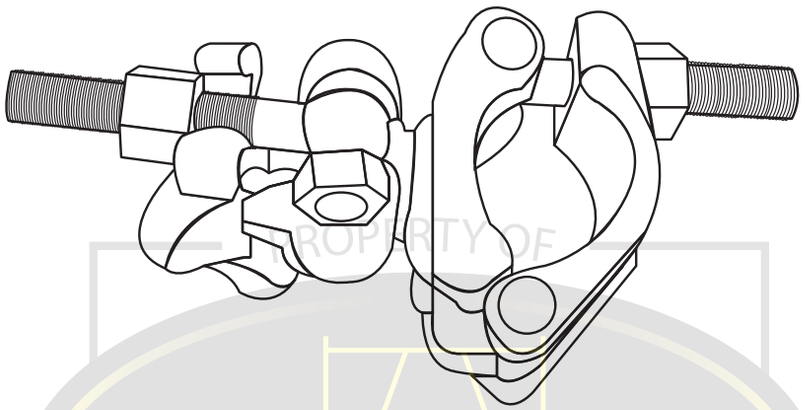

Hexagonal head of clamp bolts are tightened to 38 ft. lbs. prior to loading for all tests.

CHEMICAL ANALYSIS						
			Q255, GRADE A *		AISI 1020 *	
ELEMENT		RESULT %	MIN %	MAX %	MIN %	MAX %
C	=	0.18	0.14	0.22	0.18	0.23
Mn	=	0.38	0.30	0.65	0.30	0.60
P	=	0.011	0.000	0.045	0.000	0.040
S	=	0.022	0.000	0.050	0.000	0.050

* The material from Clamp-S meets Chinese steel Q255, Grade A. It also meets comparable US steel AISI 1020.

LOAD TEST			
Test Method: EN74 | Quantity: 2			
	SLIP LOAD *	ULTIMATE LOAD *	
Coupler #	Slip Load (measured after 0.275″ travel)	Ultimate Load	Failure Mode
1	10,514 lbs	16,000 lbs	center swivel and deformation of 1 pivot pin
2	8,345 lbs	9,779 lbs	forging around pivot pin
Average	9,430 lbs	12,890 lbs	

*With a 4:1 safety factor:

- the average slip load value is 2,357 lbs
- the average ultimate load value is 3,223 lbs

The load data presented is the result of testing conducted in accordance with the Scaffold, Shoring and Forming Institute SC100/05 STANDARDS FOR TESTING AND RATING SCAFFOLD ASSEMBLIES AND COMPONENTS.

RIGHT ANGLE BEAM CLAMP

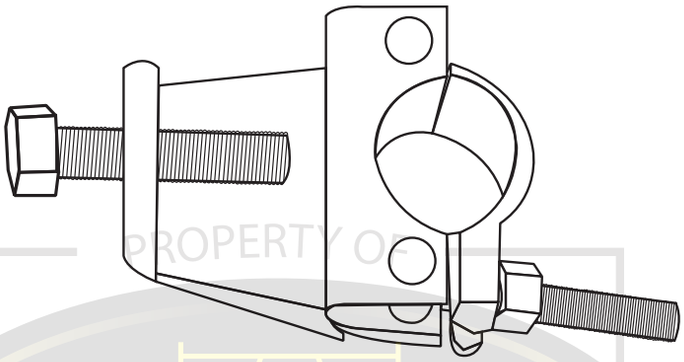

Hexagonal head of clamp bolts are tightened to 38 ft. lbs. prior to loading for all tests.

CHEMICAL ANALYSIS						
			Q255, GRADE A		AISI 1020	
ELEMENT		RESULT %	MIN %	MAX %	MIN %	MAX %
C	=	0.18	0.14	0.22	0.18	0.23
Mn	=	0.44	0.30	0.65	0.30	0.60
P	=	0.010	0.000	0.045	0.000	0.040
S	=	0.018	0.000	0.050	0.000	0.050

* The material from Right Angle Beam Clamp meets Chinese steel Q255, Grade A. It also meets comparable US steel AISI 1020.

LOAD TEST		
Tested in compliance with BS EN74 ANSI/SSFI SC100-5/05		
ULTIMATE LOAD CAPACITY		
Sample #	Max Load (lbs)	Failure Mode
1	9,111	bolt fracture
2	6,455	bolt fracture
3	8,633	bolt fracture

*With a 4:1 safety factor:

- the average working load value is 1,946 lbs
- the average ultimate load value is 7,783 lbs

The load data presented is the result of testing conducted in accordance with the Scaffold, Shoring and Forming Institute SC100/05 STANDARDS FOR TESTING AND RATING SCAFFOLD ASSEMBLIES AND COMPONENTS.

SWIVEL BEAM CLAMP

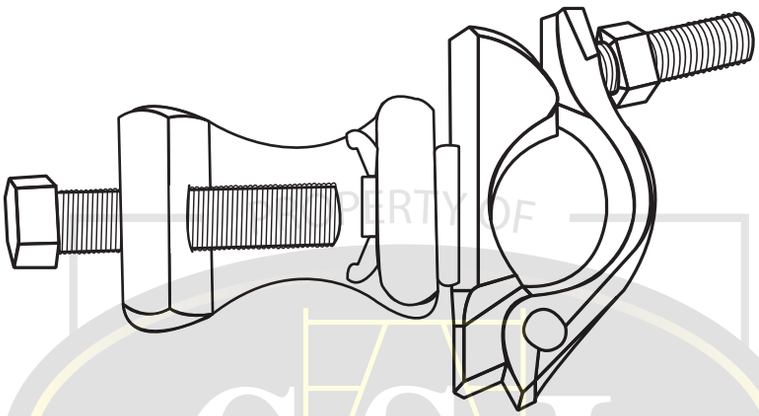

Hexagonal head of clamp bolts are tightened to 38 ft. lbs. prior to loading for all tests.

CHEMICAL ANALYSIS						
			Q255, GRADE A *		AISI 1020 *	
ELEMENT		RESULT %	MIN %	MAX %	MIN %	MAX %
C	=	0.18	0.14	0.22	0.18	0.23
Mn	=	0.38	0.30	0.65	0.30	0.60
P	=	0.011	0.000	0.045	0.000	0.040
S	=	0.022	0.000	0.050	0.000	0.050

* The material from Swivel Beam Clamp meets Chinese steel Q255, Grade A. It also meets comparable US steel AISI 1020.

LOAD TEST		
Test Method: ANSI/SSFI SC100-5/05 and EN74		
ULTIMATE LOAD CAPACITY		
Sample #	Max Load (lbs)	Failure Mode
1	5,382	deflection of clamp on beam side
2	4,893	deflection of clamp on beam side
3	5,119	deflection of clamp on beam side

Two beam clamps were tested in pairs, resulting in a load of 11,900 lbs.

*With a 4:1 safety factor:

- the average working load value is 1,285 lbs
- the average ultimate load value is 5,138 lbs

The load data presented is the result of testing conducted in accordance with the Scaffold, Shoring and Forming Institute SC100/05 STANDARDS FOR TESTING AND RATING SCAFFOLD ASSEMBLIES AND COMPONENTS.

CASTERS

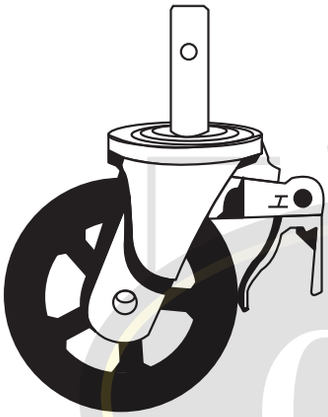

8″ caster

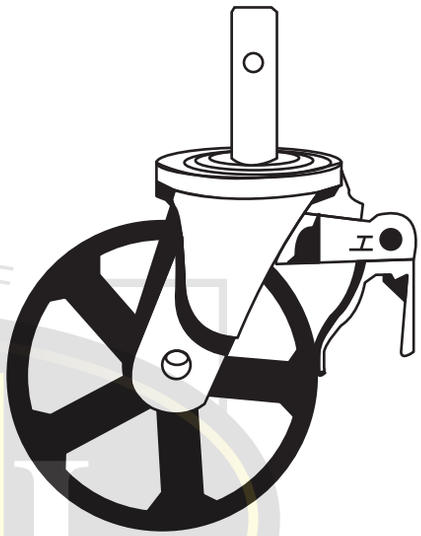

12″ caster

ITEM #	SPECIFICATIONS	WEIGHT (lbs)	SAFETY LOAD (lbs)
S900	8″	11.83	600
SC12	12″	33.00	1200

The load data presented is the result of testing conducted in accordance with the Scaffold, Shoring and Forming Institute SC100/05 STANDARDS FOR TESTING AND RATING SCAFFOLD ASSEMBLIES AND COMPONENTS.

DEBRIS NET

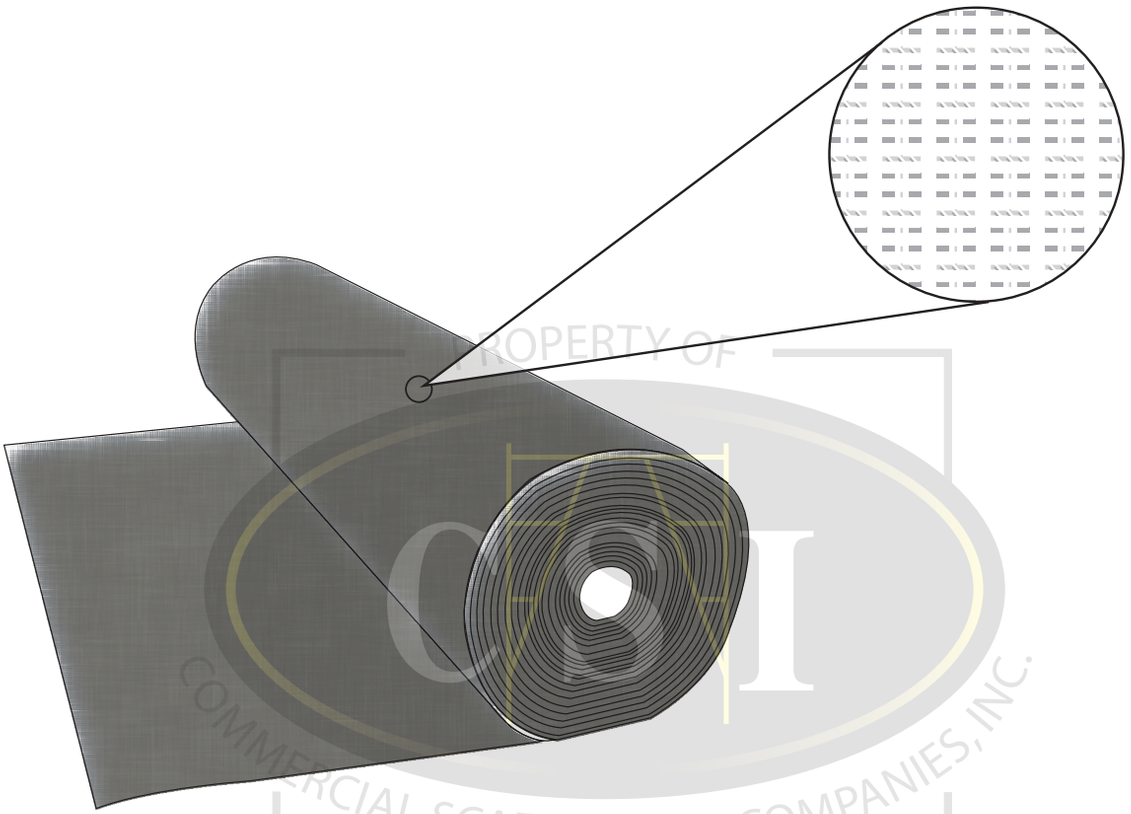

NOMINAL WEIGHT:	8.26 oz / sq yd	
MATERIAL:	high density knitted polyethylene	
COLOR:	black	
DENSITY:	9 x 13 / sq inch	
TENSILE STRENGTH:	≥ 117 lbf ≥ 125 lbf	ASTM D-5034:1995, C.R.E. Grab Method
TEAR STRENGTH:	≥ 50.7 lbf ≥ 59.1 lbf	ASTM D-5587:1996, C.R.E. Trapezoid Method
ELONGATION:	43% 69%	ASTM D-5034:1995, C.R.E. Grab Method
BURST STRENGTH:		ASTM D-3786:2001, C.R.E. Hydraulic Method

The load data presented is the result of testing conducted in accordance with the Scaffold, Shoring and Forming Institute SC100/05 STANDARDS FOR TESTING AND RATING SCAFFOLD ASSEMBLIES AND COMPONENTS.

NOTES

LOS ANGELES
Commercial Scaffolding
of CA, Inc.
14928 S. Maple Ave.
Gardena, CA 90248
310.324.7004
fax 310.324.7466
CA License #835630

SAN DIEGO
Commercial Scaffolding
of CA, Inc.
8131 Wing Ave.
El Cajon, CA 92020
619.938.9442
fax 619.938.9476
CA License #835630

LAS VEGAS
Commercial Scaffolding
of NV, Inc.
3555 Polaris Ave.
Las Vegas, NV 89103
702.897.6003
fax 702.897.6300
NV License #0070387

www.csiscaffold.com